REGENCY
FIREPLACE PRODUCTS

Bellavista® B36XTE Gas Fireplace

Owners & Installation Manual

MODEL: B36XTE-11
Medium DV Gas Fireplace

Bellavista B36XT Video

www.regency-fire.com

⚠ Warning
Fire or explosion Hazard
Failure to follow safety warnings exactly could result in serious injury, death, or property damage.

- **Do not store or use gasoline or other flammable vapors and liquids in the vicinity of this or any other appliance.**

- **WHAT TO DO IF YOU SMELL GAS**
  - **Do not try to light any appliance.**
  - **Do not touch any electrical switch: do not use any phone in your building. Leave the building immediately.**
  - **Immediately call your gas supplier from a neighbor's phone. Follow the gas supplier's instructions.**
  - **If you cannot reach your gas supplier, call the fire department.**

- **Installation and service must be performed by a qualified installer, service agency or the gas supplier.**

Tested by: Intertek	Certified to/Certifié pour: CSA 2.17-2017 ANSI Z21.88-2019 CSA 2.33-2019	***Installer:*** Please complete the details on the back cover and leave this manual with the homeowner. ***Homeowner:*** Please keep these instructions for future reference.

To the New Owner:

Congratulations!
You are the owner of a state-of-the-art Gas Fireplace by REGENCY®. The Bellavista™ B36XTE has been designed to provide you with all the warmth and charm of a wood fireplace at the flick of a switch. The Bellavista™ B36XTE has been approved by Warnock Hersey/Intertek for both safety and efficiency. As it also bears our own mark, it promises to provide you with economy, comfort and security for many trouble free years to follow. Please take a moment now to acquaint yourself with these instructions and the many features of your Regency® Fireplace.

DANGER

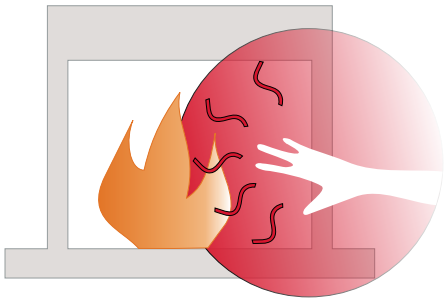

HOT GLASS WILL CAUSE BURNS

DO NOT TOUCH GLASS UNTIL COOLED

NEVER ALLOW CHILDREN TO TOUCH GLASS

A barrier designed to reduce the risk of burns from the hot viewing glass is provided with this appliance and must be installed for the protection of children and other at risk individuals.

CAUTION:

HOT WHILE IN OPERATION. DO NOT TOUCH.
SEVERE BURNS MAY RESULT. KEEP CHILDREN, CLOTHING, FURNITURE, GASOLINE, AND ANY OTHER LIQUIDS WITH FLAMMABLE VAPOURS AWAY.

KEEP BURNER AND CONTROL COMPARTMENT CLEAN.
SEE INSTALLATION AND OPERATING INSTRUCTIONS ACCOMPANYING APPLIANCE.

920-408

On Demand Pilot Light (seven day safety timer)

Important information if using the appliance in CPI (continuous pilot mode) only.
This appliance is a ProFlame 1 system fitted with the "On Demand" Pilot, a safety feature which will shut down the gas valve completely by extinguishing the pilot light in the event of a continuous full seven days of inactivity.
This only applies if the CPI (continuous pilot) switch is in the "on" position.
Each time the main burner shuts down, manually or through the call from the thermostat, the seven day timer starts again.
The seven day inactivity timer is controlled within the circuit board. Therefore, if in CPI mode and when the pilot light is extinguished after seven straight days of inactivity, the IPI/CPI rocker switch will remain in the "on" position. Therefore, all that is required to relight the pilot would be to press the on/off button on the remote control transmitter from "on" to "off" and back to "on". Once the pilot has re-established operation will resume as normal. There is no requirement to do anything with the IPI/CPI rocker switch.
If the unit never goes as long as seven full days without a call for heat, the pilot will remain lit until it is manually shut-off.
If the unit is being operated in IPI (intermittent pilot) mode, neither the above instructions nor the seven day timer will apply.
See the instructions in this manual and on the Lighting Instructions plate on the appliance to light or re-light the pilot.

MANUFACTURED MOBILE HOME REQUIREMENTS

INFORMATION FOR MOBILE/MANUFACTURED HOMES AFTER FIRST SALE

This Regency® product has been tested and listed by Intertek as a Direct Vent Wall Furnace to the following standards: to Vented Gas Fireplace Heaters ANSI Z21.88 • CSA 2.33 and Gas-fired Appliances for Use at High Altitudes CSA 2.17.

This Direct Vent System Appliance must be installed in accordance with the manufacturer's installation instructions and the Manufactured Home Construction and Safety Standard, Title 24 CFR, Part 3280, or the current Standard of Fire Safety Criteria for Manufactured Home Installations, Sites, and Communities ANSI/NFPA 501A, and with CAN/CSA Z240-MH Mobile Home Standard in Canada.

This appliance installation must comply with the manufacturer's installation instructions and local codes, if any. In the absence of local codes follow the current National Fuel Gas Code, ANSI Z223.1 and the current National Electrical Code ANSI/NFPA 70 in the U.S.A., and the current CSA B149.1 Gas Installation Code and the current Canadian Electrical Code CSA C22.1 in Canada.

This appliance comes equipped with a dedicated #8 Ground Lug for attachment of the ground wire to the steel chassis as applicable to local codes.

The appliance, when installed, must be electrically grounded in accordance with local codes or, in the absence of local codes, with the National Electrical Code, ANSI/NFPA 70, or the Canadian Electrical Code, CSA C22.1.

This appliance may only be installed in an aftermarket permanently located, manufactured (U.S.A only) or mobile home, where not prohibited by local codes.

This appliance can only be used with the type of gas indicated on the rating plate. This appliance is not convertible for use with other gases.

Ensure that structural members are not cut or weakened during installation.

NATIONAL FIREPLACE INSTITUTE NFI CERTIFIED www.nficertified.org

We recommend that our products be installed and serviced by professionals who are certified in the U.S. by the National Fireplace Institute® (NFI) or in Canada by Wood Energy Technical Training (WETT).

Wood Energy Technical Training

Bellavista B36XT Video

Bellavista Benefits Video

table of contents

Owner's Information

Copy of Safety Decal 5
Decal Location 5
Unit Dimensions with Vignette & Vignette Finishing Trim 6
Unit Dimensions with Optional Flush Panels & Safety Screen 7
Important Message 10
Before You Start.....10
General Safety Information 10
Lighting Procedure 11
Copy of Lighting Plate Instructions 12
Proflame I Remote Control Operating Instructions 13
Proflame I Remote Receiver Battery Replacement.....17
Warranty 82

Installer's Information

Gas Installation Checklist 8
Installation Checklist.....19
Locating Your Gas Fireplace Clearances.....19
Clearances.....20
Combustible Mantel Clearances 21
Mantel Leg Clearances.....22
Framing.....22
Framing with Vignette + Vignette Trim (Stepped Finish) or Flush Panels and Safety Screen 23
Framing with Vignette + Vignette Trim (Flush Finish) .24
Non-Combustible Requirements.....25
Wall Mount On / Off Switch and Remote Receiver Installation 26
Finishing.....27
Unit Assembly Prior to Installation 27
Top Standoff Assembly 27
Top Facing Support 28
Side Nailing Strips 28
Conversion to Top Vent.....29
Vent Restrictor, Baffle & Heat Deflector Installation 31
Venting Introduction.....31
Exterior Vent Termination Requirements.....32
Top Vent Reducer Installation –5"x 8" to 4"x 6-5/8" ...33
Venting - Direct Vent System (Flex) 34
Vertical Flue Extension Kit (Part #946-756) 36
Ceiling Firestop / Firestop Spacer (Part #946-757).....36
4" x 6-5/8" Rigid Pipe - Cross Reference Chart Only...37
5" X 8" Rigid Pipe - Cross Reference Chart only 39
AstroCap XL & Rigid Rear Vent Kit for Corner Install - Rigid Pipe 5" x 8" 41
Horizontal 5" x 8" Rigid Rear Vent Kit.....42
AstroCap XL & Rigid Rear Vent Kit for Corner Install ...42
Venting Arrangements for Horizontal Terminations - Flex Vent or Rigid Pipe 5" x 8".....43
Horizontal Terminations 44
Flex Vent 5" x 8" 44
Rigid Pipe 5" x 8" 45
Venting Arrangements for Horizontal Terminations - Rigid/Flex Pipe 4" x 6-5/8" 46
Horizontal or Vertical Rigid Pipe 4" x 6-5/8".....47
Horizontal Terminations 48
Two (2) 90° Elbows (Rigid/Flex Pipe 4" x 6 - 5/8") 48
Horizontal Terminations 48
Three (3) 90° Elbows (Rigid/Flex Pipe 4" x 6 - 5/8")...48
Venting Arrangements For Vertical Terminations 49
Vertical Terminations 50
Three (3) 90° Elbows (Rigid/Flex Pipe 4" x 6 - 5/8")...50
Venting Arrangements - Co-linear Flex System 51
Vertical Terminations 52
Co-linear Flex System Into Masonry Fireplaces ..52
Unit Installation with Horizontal Termination 53
Horizontal Termination - 5" x 8" Venting.....54
Unit Installation with Vertical Termination 55
Gas Line Installation.....55
Pilot Adjustment.....56
High Elevation.....56
885 S.I.T. Valve Description.....56
Gas Pipe Pressure Testing 56
Conversion Kit #578-977 from NG to LP.....57
Brick Panel Installation 58
Optional Enamel Panel Installation.....59
Log Set Installation 60
Aeration Adjustment.....63
Wiring Diagram 63
Optional Fan Installation 64
Wiring Diagram with Optional Fan 66
Optional Wall Thermostat Installation 67
Flush Glass Door Installation 68
Vignette Frame and Safety Screen Installation.....69
Optional Vignette Inlay Installation 70
Optional Vignette Finishing Trim Installation 71
Premium Flush Front Installation 72
Safety Screen Installation 73
Optional 3 Sided Finishing Trim Installation 73
Operating Instructions 74
First Fire.....74
Normal Operating Sounds of Gas Appliances 74
Lighting Procedure 75
Shutdown Procedure 75
Copy of Lighting Plate Instructions 76
Maintenance Instructions.....77
Log Replacement 77
Glass Gasket.....77
Door Glass.....77
Removing Valve 78
Installing Valve.....78
Gas Maintenance.....79
Main Assembly 80
Burner Assembly 82
Optional Accessories.....83
Warranty 84
Recycling 90

This is a copy of the label that accompanies each Bellavista™ B36XTE Direct Vent Gas Fireplace. We have printed a copy of the contents here for your review.

NOTE: Regency® units are constantly being improved. Check the label on the unit and if there is a difference, the label on the unit is the correct one.

Copy of Safety Decal

Duplicate S/N **501**

Intertek
C #: 4001172

Listed/Nom: VENTED GAS FIREPLACE / FOYER AU GAZ À ÉVACUATION
Certified to/Certifié pour: ANSI Z21.88-2019 • CSA-2.33-2019
CSA 2.17-2017

MAY BE INSTALLED IN MANUFACTURED (MOBILE) HOMES AFTER FIRST SALE.
Refer to Intertek's Directory of Building Products for detailed information.
Pour plus de détails , se reporter au Répertoire des produits de construction de Intertek.

DO NOT REMOVE THIS LABEL / NE PAS ENLEVER CETTE ÉTIQUETTE

REGENCY FIREPLACE PRODUCTS

Serial No./ No de série
501

NATURAL GAS: Model B36XTE-NG11

				APPAREIL FONCTIONNANT AU GAZ NATUREL Modèle B36XTE-NG11
Minimum supply pressure	5.0"	WC/C.E.	(1.25 kPa)	Pression d'alimentation minimale
Manifold pressure high	3.5"	WC/C.E.	(0.87 kPa)	Pression manifold - haute
Manifold pressure low	1.6"	WC/C.E.	(0.40 kPa)	Pression manifold - basse
Orifice size	# 35	DMS		Taille de l'orifice
Minimum input	21,500	Btu/h	(6.3 kW)	Débit calorifique minimal
Maximum input	31,000	Btu/h	(9.09 kW)	Débit calorifique maximal
Altitude	0-4500	ft/pi	(0-1372 m)	Altitude

PROPANE GAS: Model B36XTE-LP11

				APPAREIL FONCTIONNANT AU GAZ PROPANE Modèle B36XTE-LP11
Minimum supply pressure	11"	WC/C.E.	(2.74 kPa)	Pression d'alimentation minimale
Manifold pressure high	10"	WC/C.E.	(2.49 kPa)	Pression manifold - haute
Manifold pressure low	6.4"	WC/C.E.	(1.60 kPa)	Pression manifold - basse
Orifice size	# 51	DMS		Taille de l'orifice
Minimum input	25,000	Btu/h	(7.33 kW)	Débit calorifique minimal
Maximum input	31,000	Btu/h	(9.09 kW)	Débit calorifique maximal
Altitude	0-4500	ft/pi	(0-1372 m)	Altitude

Minimum Clearances to Combustibles /
Dégagements minimaux par rapport aux matériaux combustibles

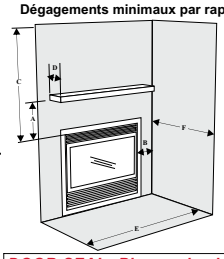

0" Clearance to combustibles from /
Top, sides, bottom and rear of unit
Mantel Clearances from Fireplace Opening /
(A) Min. 13" (330mm)
Side Wall Clearance from Fireplace Opening /
B) Min. 12" (305mm)(on one side)
Ceiling from Top of Fireplace Opening:
C) 36-3/4" (933mm)
Mantel Depth:
D) Max. 12" (304mm)
Alcove Clearances:
E) Min. Width 84" (2134mm),
F) Max. Depth 36" (914mm)
Minimum Vent Clearances:
Horizontal Top 2" (51mm)
Horizontal Side 1-1/2" (38mm)
Horizontal Bottom 1-1/2" (38mm)
Vertical Vent 1-1/2" (38mm)

DOOR SEAL: Please check that the door is properly sealed

(See Instruction Manual for detailed instructions)

This appliance must be installed in accordance with local codes, if any; if none, follow the National Fuel Gas Code, ANSI Z223.1, or Natural Gas and Propane Installation Code, CSA B149.1.
This appliance must be installed in accordance with the Standard CAN/CSA Z240 MH, Mobile Housing, in Canada, or with the Manufactured Home Construction and Safety Standard, Title 24 CFR, Part 3280, in the United States, or when such a standard is not applicable, ANSI/NCSBCS A225.1/NFPA 501A, Manufactured Home Installations Standard or ANSI A119.2 ou NFPA 501C Standard for Recreational Vehicles
This appliance is only for use with the type of gas indicated on the rating plate and may be installed in an aftermarket, permanently located, manufactured (mobile) home where not prohibited by local codes. See owner's manual for details. This appliance is not convertible for use with other gases, unless a certified kit is used. (Kit #578-972). Fan Part # 578-917.
Installer l'appareil selon les codes ou règlements locaux, ou, en l'absence de tels règlements, selon les codes d'installation ANSI Z223.1, National Fuel Gas Code ou CSA-B149.1 en vigueur. Installer l'appareil selon la norme CAN/CSA-Z240, Série MM, Maison mobiles ou CAN/CSA-Z240 VC, Véhicules de camping, ou la norme 24 CFR Part 3280, Manufactured Home Construction and Safety Standard. Si ces normes ne sont pas pertinentes, utilisez la norme ANSI/NCSBCS A225.1/NFPA 501A, Manufactured Home Installations Standard, ou ANSI A119.2 ou NFPA 501C Standard for Recreational Vehicles.
Cet appareil doit être utilisé uniquement avec le type de gaz indiqué sur la plaque signalétique. Cet appareil peut être installé dans une maison préfabriquée ou mobile (É.-U. seulement) installée à demeure si les règlements locaux le permettent. Voir la notice de l'utilisateur pour plus de renseignements. Cet appareil ne peut pas être utilisé avec d'autres gaz sauf si une trousse de conversion certifiée est fournie.

This vented gas fireplace heater is not for use with air filters.
Ne pas utiliser de filtre à air avec ce foyer au gaz à évacuation.
FOR USE WITH GLASS DOORS CERTIFIED WITH THE APPLIANCE ONLY
POUR UTILISATION UNIQUEMENT AVEC LES PORTES EN VERRE CERTIFIÉES AVEC L'APPAREIL
For Use Only with Barrier (Part #578-005 with Vignette) or (Part #578-929 Installed with Flush Panels) Follow installation instructions.
Utiliser uniquement avec l'écran (n°578-005 avec façade Vignette) ou (n°578-929 Installation avec panneaux affleurants). Suivre les consignes d'installation.
Electrical supply/Alimentation électrique 115VAC, 1.13 A, 60Hz.

FPI Fireplace Products International Ltd.
Delta, BC, Canada
Made in Canada/
Fabriqué au Canada

VENTED GAS FIREPLACE HEATER - NOT FOR USE WITH SOLID FUELS. CATEGORY I.
FOYER AU GAZ À ÉVACUATION - NE PAS UTILISER AVEC UN COMBUSTIBLE SOLIDE. CATÉGORIE I.

Intertek
EP5011169
CANADIAN ENERGY PERFORMANCE VERIFIED
RENDEMENT ÉNERGÉTIQUE VÉRIFIÉ

CSA P.4.1 Fireplace Efficiency (FE) /Efficacité énergétique des foyers (EEF) CSA P.4.1
Natural Gas / Gaz naturel 65.90%
Propane Gas / Gaz propane 65.90%

919-999b

For the State of Massachusetts, installation and repair must be done by a plumber or gas fitter licensed in the Commonwealth of Massachusetts.

For the State of Massachusetts, flexible connectors shall not exceed 36 inches in length.

For the State of Massachusetts, the appliances individual manual shut-off must be a t-handle type valve.

The State of Massachusetts requires the installation of a carbon monoxide alarm in accordance with NFPA 720 and a CO alarm with battery back up in the same room where the gas appliance is installed.

Decal Location

Remove the faceplate from unit (refer to manual) the rating plate will be attached to a black chain as shown below.

DO NOT REMOVE DECAL FROM UNIT.

dimensions

Unit Dimensions with Vignette & Vignette Finishing Trim

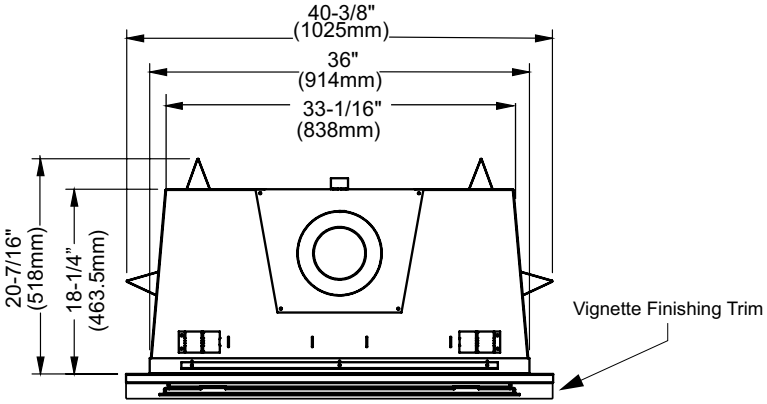

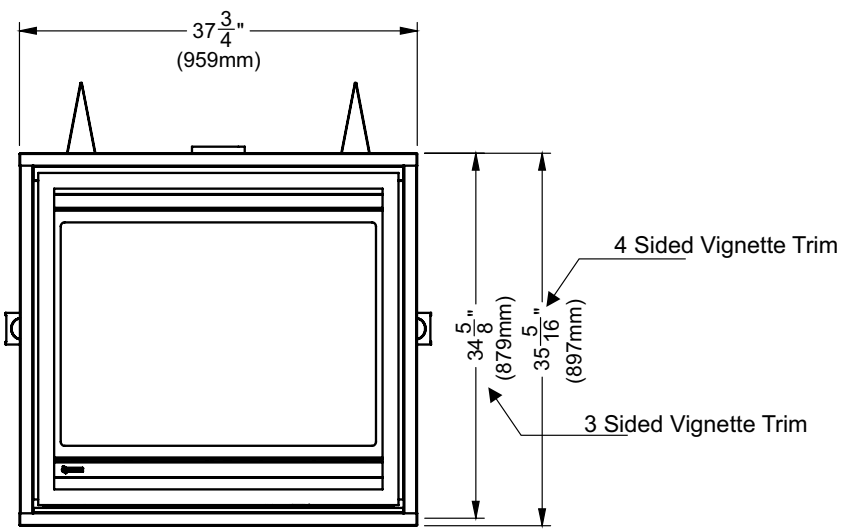

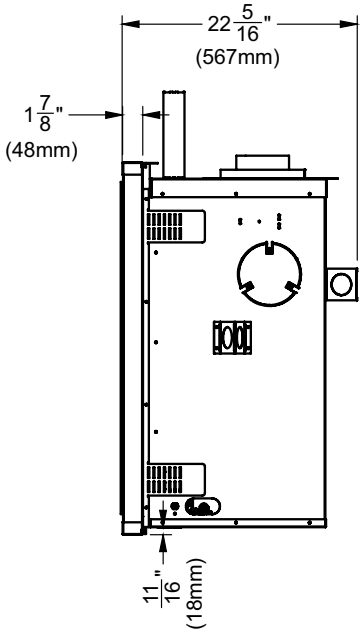

Front view : shown with 3 sided finishing trim.

ALL PICTURES / DIAGRAMS SHOWN THROUGHOUT THIS MANUAL ARE FOR ILLUSTRATION PURPOSES ONLY. ACTUAL PRODUCT MAY VARY DUE TO PRODUCT ENHANCEMENTS.

Unit Dimensions with Optional Flush Panels and Safety Screen

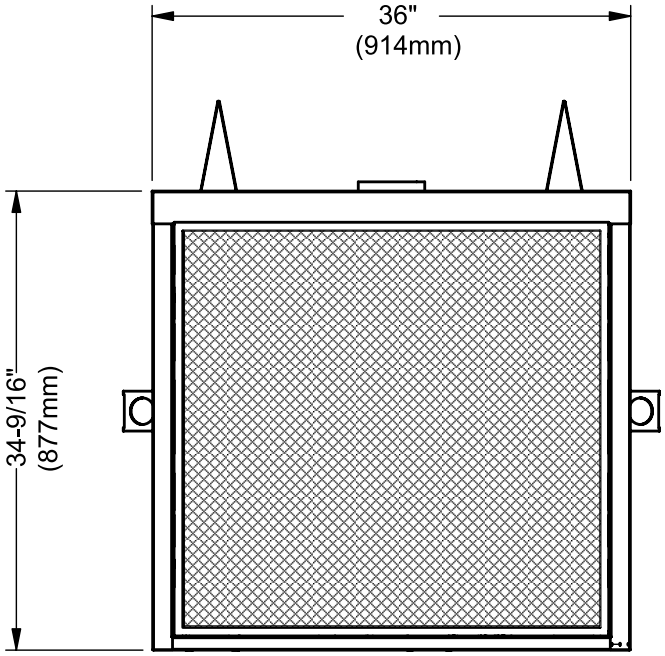

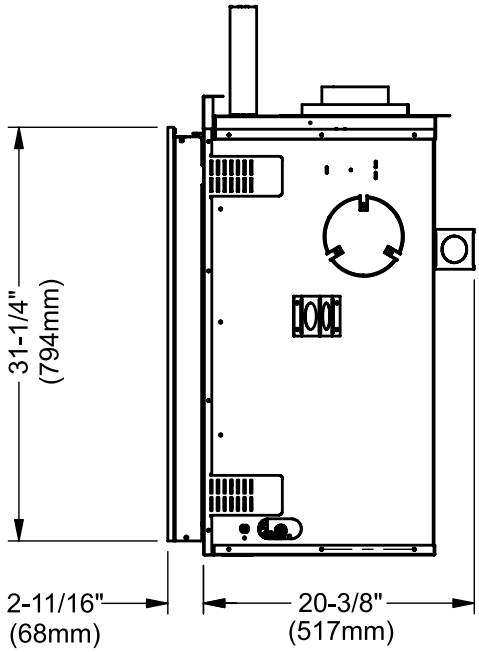

3-sided finishing trim not shown: 40-1/2" wide x 35-3/4" high

Gas Installation Checklist

This general checklist does not contain all pertinent installation details or specifics and does not supersede the guidelines in this manual. Your Regency dealer/installer should use it in conjunction with manual instructions. Please follow all local codes and jurisdictions in authority.

Customer:		**Date Installed:**	
Install Address:		**Location of Fireplace:**	
Serial No:		**Installer:**	
Model No:			

Site Requirements	**YES**	**NO**
If applicable, are the insulation, vapour barrier, and drywall present if installed on an outside wall or chase?		
Does the area have a solid continuous base to support the unit?		
Will the area accommodate the size of the applliance and all clearances?		
Are the gas and electrical roughed into the area where the unit is being installed?		
In City & Grandview series cool wall applications, is the chase enclosure sealed to prevent heat from escaping? All hot air from the unit must exit via the mandatory ventilation openings.		
In City & Grandview applications, Is the chase enclosure vented with the mandatory heat ventilation openings? See manual for details.		
If applicable, is the masonry/factory built freplace in its original condition with no modifications?		
If applicable, have the hearth requirements been met?		
Unit Setup	**YES**	**NO**
If applicable, are the standoffs and top nailing flange extensions installed and at the correct depth to accommodate finishing material? See manual for details.		
If applicable, is the fireplace level and secured, meeting framing clearances? See manual for details.		
If applicable, is the unit converted to top or rear vent per manual instructions, and the insulation discarded?		
Venting	**YES**	**NO**
Are the venting components approved for the unit installed?		
Does the venting configuration comply with venting diagrams?		
Is venting installed and secured, and are clearances for the vent pipe and termination cap maintained?		
If applicable, was a 1/4" rise maintained for every foot of horizontal run?		
Was the termination installed and sealed?		
Is the direct vent termination at the highest point in the vent assembly?		
If applicable, are both chimney liners continuous from flue collars to termination?		
Electrical and Wiring	**YES**	**NO**
Is the appliance connected to the household's 110/120v per local codes? Check local codes for receptacle placement.		
Were the connections in the fireplace tested with a circuit tester?		
Is the appliance properly grounded?		
If applicable, is the supplied electrical/gang box affixed to the wall to facilitate the mounting of the receiver/battery box ?		
If applicable, is all electrical, Ethernet, HDMI, networking, optical, wire/cables, conduits, etc. run through the wood or steel stud work as wires/cables of any kind cannot be exposed directly above or over the fireplace?		
Gas	**YES**	**NO**
Does the supply pressure meet the requirements shown on the rating plate?		
Was a conversion performed?		
Was a leak check performed and manifold pressures verified?		

Is the shut-off valve installed and easily accessible to the customer?		
Finishing	**YES**	**NO**
If applicable, is only noncombustible material installed in the noncombustible areas?		
Do clearances meet installation and manual requirements?		
Do the mantels and/or projections comply with the installation manual?		
If applicable, was the solid fuel fireplace warning plate installed?		
Is the chase enclosure fully open the full width, height and depth above the fireplace as per the requirements noted in the framing section?		
Appliance Media Setup	**YES**	**NO**
Do commands from the remote or wall switch light the pilot and main burner?		
Are the burner media/log set, glass door, and screen installed per instructions in the manual?		
Was the air shutter on the proper setting after running the unit for 20 minutes?		
If applicable, were the surround and trims installed according to the manual?		
Was the operation of the fan, lights (if installed), and flame modulation checked?		
Customer Tutorial and Presentation	**YES**	**NO**
Is the customer confident operating the new gas appliance and aware of all the features on the remote?		
Confirm that the rating and lighting plates are attached to the appliance. Do not remove.		
Was the customer informed of the location of the rating and lighting plates?		
Was accessing unit controls in a power outage explained to the customer?		
Are the model and serial numbers and the date of installation of the unit written in the manual and on the checklist?		
Were the warranty and unit registration reviewed with the customer?		
Comments:		

Important Message

SAVE THESE INSTRUCTIONS

The B36XTE Gas Fireplace must be installed in accordance with these instructions. Carefully read all the instructions in this manual first. Consult the "authority having jurisdiction" to determine the need for a permit prior to starting the installation. It is the responsibility of the installer to ensure this fireplace is installed in compliance with manufacturers instructions and all applicable codes.

Before You Start

Safe installation and operation of this appliance requires common sense, however, we are required by the Canadian Safety Standards and ANSI Standards to make you aware of the following:

INSTALLATION AND REPAIR SHOULD BE DONE BY AN AUTHORIZED SERVICE PERSON. THE APPLIANCE SHOULD BE INSPECTED BEFORE USE AND AT LEAST ANNUALLY BY A PROFESSIONAL SERVICE PERSON. MORE FREQUENT CLEANING MAY BE REQUIRED DUE TO EXCESSIVE LINT FROM CARPETING, BEDDING MATERIAL, ETC. IT IS IMPERATIVE THAT CONTROL COMPARTMENTS, BURNERS AND CIRCULATING AIR PASSAGEWAYS OF THE APPLIANCE BE KEPT CLEAN.

DUE TO HIGH TEMPERATURES, THE APPLIANCE SHOULD BE LOCATED OUT OF TRAFFIC AND AWAY FROM FURNITURE AND DRAPERIES.

WARNING: FAILURE TO INSTALL THIS APPLIANCE CORRECTLY WILL VOID YOUR WARRANTY AND MAY CAUSE A SERIOUS HOUSE FIRE.

CHILDREN AND ADULTS SHOULD BE ALERTED TO THE HAZARDS OF HIGH SURFACE TEMPERATURES, ESPECIALLY THE FIREPLACE GLASS, AND SHOULD STAY AWAY TO AVOID BURNS OR CLOTHING IGNITION.

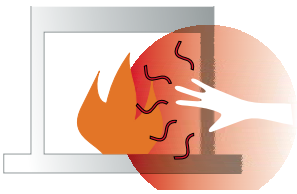

YOUNG CHILDREN SHOULD BE CAREFULLY SUPERVISED WHEN THEY ARE IN THE SAME AREA AS THE APPLIANCE. TODDLERS, YOUNG CHILDREN AND OTHERS MAY BE SUSCEPTIBLE TO ACCIDENTAL CONTACT BURNS. A PHYSICAL BARRIERS IS RECOMMENDED IF THERE ARE AT RISK INDIVIDUAL IN THE HOUSE. TO RESTRICT ACCESS TO A FIREPLACE OR STOVE, INSTALL AN ADJUSTABLE SAFETY GATE TO KEEP TODDLERS, YOUNG CHILDREN AND OTHER AT RISK INDIVIDUALS OUT OF THE ROOM AND AWAY FROM HOT SURFACES.

CLOTHING OR OTHER FLAMMABLE MATERIAL SHOULD NOT BE PLACED ON OR NEAR THE APPLIANCE.

A BARRIER DESIGNED TO REDUCE THE RISK OF BURNS FROM THE HOT VIEWING GLASS IS PROVIDED WITH THIS APPLIANCE AND SHALL BE INSTALLED FOR THE PROTECTION OF CHILDREN AND OTHER AT-RISK INDIVIDUALS

ANY SAFETY SCREEN, GUARD, OR BARRIER REMOVED FOR SERVICING THE APPLIANCE, MUST BE REPLACED PRIOR TO OPERATING THE APPLIANCE.

IF THE BARRIER BECOMES DAMAGED, THE BARRIER SHALL BE REPLACED WITH THE MANUFACTURER'S BARRIER FOR THIS APPLIANCE.

General Safety Information

1. The appliance installation must conform with local codes or, in the absence of local codes, with the current Canadian or National Gas Codes, CSA B149.1 or ANSI Z223.1 Installation Codes.

2. The appliance when installed, must be electrically grounded in accordance with local codes, or in the absence of local codes with the current National Electrical Code, ANSI/NFPA 70 or CSA C22.1 Canadian Electrical Code.

WARNING: Cancer and Reproductive Harm
www.P65Warnings.ca.gov
919-874

3. See general construction and assembly instructions. The appliance and vent should be enclosed.

4. This appliance must be connected to the specified vent and termination cap to the outside of the building envelope. Never vent to another room or inside a building. Make sure that the vent is fitted as per Venting instructions.

5. Inspect the venting system annually for blockage and any signs of deterioration.

6. Venting terminals shall not be recessed into a wall or siding.

7. Any safety glass removed for servicing must be replaced prior to operating the appliance.

8. To prevent injury, do not allow anyone who is unfamiliar with the operation to use the fireplace.

9. Wear gloves and safety glasses for protection while doing required maintenance.

10. Be aware of electrical wiring locations in walls and ceilings when cutting holes for termination.

11. Under no circumstances should this appliance be modified. Parts that have to be removed for servicing should be replaced prior to operating this appliance.

12. Installation and any repairs to this appliance should be done by a qualified service person. A professional service person should be called to inspect this appliance annually. Make it a practice to have all of your gas appliances checked annually.

13. Do not slam shut or strike the glass door.

14. Under no circumstances should any solid fuels (wood, paper, cardboard, coal, etc.) be used in this appliance.

15. The appliance area must be kept clear and free of combustible materials, (gases and other flammable vapours and liquids).

16. Ensure that all electrical, Ethernet, HDMI, networking, optical, wires/cables, conduits, etc. are run through the wood or steel stud work. Do not place directly above or have exposed over the fireplace.

17. The chase enclosure must be fully open the full width, height and depth above the fireplace as per the requirements noted in the framing section.

18. Be aware of hot wall & mantle surfaces. Although safe, the wall & mantle directly above the fireplace can get very hot when the fireplace heats. Do not touch!

19. Be aware of hot surfaces in front of the fireplace glass. Although safe and depending of its elevation, flooring directly in front of the fireplace can get very hot when the fireplace heats.

20. Solid wood flooring in front of the fireplace (if allowed) may shrink during the heating season due to heat.

Lighting Procedure

IMPORTANT: The remote control system supplied with this appliance has several options for starting/operating the appliance using the power button and ON/OFF key on the hand held transmitter.
Prior to operating this appliance, please read the remote control operating instructions (packaged with remote control) to understand how to operate this remote control system. Option to download remote functions video with QR code below.

Proflame video

1. Ensure the wall switch/receiver is in the remote position. (see Diagram 1).

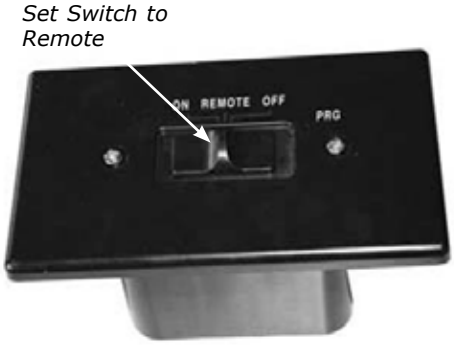

Diagram 1

2. Press and release the ON/OFF button on the remote handheld transmitter (see Diagram 2). An audible beep should be heard from the receiver.

Diagram 2
Remote shown in Manual Mode on Hi

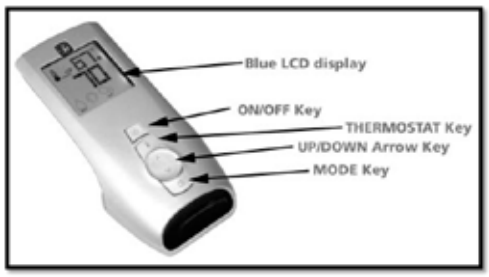

3. After approximately 4 seconds the spark ignition system will spark for 60 seconds to light the pilot.

4. The unit will turn on.

Note: The first try for ignition will last approximately 60 seconds. If there is no flame ignition (rectification) the board will stop sparking for approximately 35 seconds. After wait time , the board will start second try for ignition by sparking for approximately 60 seconds. If there is still no positive ignition the board will go into lock out.

The system will need to be reset as follows:

a) Turn the system off using ON/OFF switch or press ON/OFF button - if using remote.
b) After approximately 2 seconds turn on ON/OFF switch or press ON/OFF button if using remote.
c) Repeat step 2.

Shutdown Procedure

1. Turn the wall mounted switch or remote to the "OFF" position.

2. Press "OFF" on the remote control.

3. Turn the gas control knob to the "OFF" position to turn off the pilot.

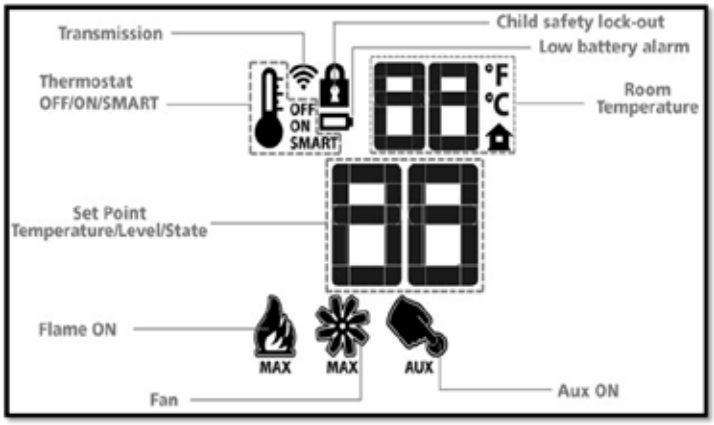

Copy of Lighting Plate Instructions

FOR YOUR SAFETY READ BEFORE LIGHTING
POUR VOTRE SÉCURITÉ – À LIRE AVANT LA MISE EN MARCHE

WARNING: If you do not follow these instructions exactly, a fire or explosion may result causing property damage, personal injury or loss of life. Improper installation, adjustment, alteration, service or maintenance can cause injury or property damage. Refer to the owner's information manual provided with this appliance. For assistance or additional information consult a qualified installer, service agency or gas supplier.

AVERTISSEMENT : Quiconque ne respecte pas scrupuleusement les instructions de la présente notice risque de déclencher un incendie ou une explosion pouvant entraîner des dégâts matériels ou des blessures pouvant être mortelles.
Tout défaut d'installation, de réglage, de modification, de service ou d'entretien peut entraîner des blessures ou des dommages matériels. Reportez-vous au manuel d'utilisation fourni avec cet équipement. Pour obtenir de l'aide ou des informations complémentaires, consulter un installateur ou un service d'entretien qualifié, ou le fournisseur de gaz.

A) This appliance is equipped with an ignition device which automatically lights the pilot.
Do not try to light the pilot by hand.
B) BEFORE OPERATING smell all around the appliance area for gas. Be sure to smell next to the floor because some gas is heavier than air and will settle on the floor.
WHAT TO DO IF YOU SMELL GAS
- Do not try to light any appliance.
- Do not touch any electric switch, do not use any phone in your building.
- Leave the building immediately.
- Immediately call your gas supplier from a neighbours phone. Follow the gas supplier's instructions.
- If you cannot reach your gas supplier, call the fire department.

C) Do not use this appliance if any part has been under water. Immediately call a qualified service technician to inspect the appliance and to replace any part of the control system and any gas control which has been underwater.

A) Cet appareil est muni d'un dispositif d'allumage qui allume automatiquement la veilleuse.
Ne tentez pas d'allumer la veilleuse manuellement.
B) AVANT LA MISE EN MARCHE, reniflez tout autour de l'appareil pour déceler une odeur de gaz. Reniflez au niveau du plancher, car certains gaz sont plus lourds que l'air et peuvent s'accumuler au niveau du sol.
QUE FAIRE SI VOUS SENTEZ UNE ODEUR DE GAZ :
- Ne tentez pas d'allumer l'appareil
- Ne touchez à aucun interrupteur; n'utilisez pas le téléphone se trouvant dans le bâtiment.
- Quittez immédiatement le bâtiment.
- Appelez immédiatement votre fournisseur de gaz depuis un téléphone extérieur. Suivez les instructions du fournisseur.
- Si vous ne pouvez pas rejoindre le fournisseur, appelez le service incendie.

C) N'utilisez pas cet appareil s'il a été plongé dans l'eau, même partiellement. Faites inspecter l'appareil par un technicien qualifié et remplacez tout élément du système de contrôle ou de commande qui a été plongé dans l'eau.

CAUTION: Hot while in operation. Do not touch. Severe burns may result. Due to high surface temperatures keep children, clothing and furniture, gasoline and other liquids having flammable vapors away. Keep burner and control compartment clean. See installation and operating instructions accompanying appliance.

ATTENTION : Surfaces chaudes lorsque l'appareil est en marche. Ne pas toucher. Risque de brûlures graves. En raison des températures élevées, les enfants, les vêtements et le mobilier, le carburant et tout autre liquide aux vapeurs inflammables doivent être tenus éloignés de l'appareil. Nettoyer régulièrement le brûleur et le compartiment des commandes. Voir les consignes d'installation et d'utilisation fournies avec l'appareil.

OPERATING INSTRUCTIONS / CONSIGNES DE FONCTIONNEMENT

1) STOP! Read the safety information above on this label.
2) Ensure the Main switch is in the ON position and/or the wall mounted battery holder (if equipped) is in the <REMOTE> position.
3) Press and release the ON/OFF button on the remote handheld transmitter. An audible beep should be heard from the receiver. If not using the remote, the unit can also be turned on by sliding the battery holder switch to the <ON> position (if equipped).
4) After approximately 4 seconds the spark ignition system will spark for 60 seconds to light the main burner.
5) The unit will turn on.
Note: The first attempt to ignition will last approximately 60 seconds. If there is no flame ignition (rectification) the board will stop sparking for approximately 35 seconds. After this wait time, the board will start a second try for ignition by sparking for approximately 60 seconds. If there is still no positive ignition after the second attempt the board will go into lock out.
The system will need to be reset as follows (after going into lock out mode):
a) Wait 5 minutes - turn the system off by pressing the ON/OFF button on the remote.
b) After approximately 2 seconds press the ON/OFF button again.
c) Unit will repeat step 2.
6) If the appliance will not operate, follow the instructions, "To Turn Off Gas to Appliance" and call your service technician or gas supplier. This appliance is equipped with an on-demand pilot that shuts off after seven days.

1) STOP! Lisez les instructions de sécurité sur la portion supérieure de cette étiquette.
2) S'assurer que le commutateur principal est en position ON et/ou que le bloc-piles mural (le cas échéant) est en position <REMOTE>.
3) Appuyer sur la touche ON/OFF de la télécommande puis relâcher. Un bip sonore retentira depuis le récepteur. Si vous n'utilisez pas la télécommande, l'appareil peut également être allumé en faisant glisser le commutateur du bloc-piles sur la position <ON> (le cas échéant).
4) Après environ 4 secondes, le système d'allumage produira une étincelle pendant 60 secondes pour allumer le brûleur principal.
5) L'appareil s'allumera.
Remarque : Au premier allumage, le système tente d'allumer les flammes pendant 60 secondes. Si l'essai est infructueux, le système fera une pause de 35 secondes. C'est ce qu'on appelle l'étape de rectification. Ce délai écoulé, le système tente à nouveau d'allumer les flammes en produisant des étincelles pendant 60 secondes. Si les flammes ne s'allument toujours pas, le système se met en mode verrouillage.
Il faut alors le réinitialiser en suivant les étapes ci-dessous (pour le déverrouiller) :
a) Attendre 5 minutes et éteindre l'appareil en appuyant sur la touche ON/OFF de la télécommande.
b) Attendre 2 secondes et appuyer encore une fois sur la touche ON/OFF.
c) L'appareil répètera l'étape 2.
6) Si l'appareil ne fonctionne pas, suivez les instructions "Pour couper le gaz au niveau de l'appareil" et appelez un technicien qualifié ou votre fournisseur de gaz.
Cet appareil est équipé d'une veilleuse sur demande qui s'éteint après sept jours.

TO TURN OFF GAS TO APPLIANCE / POUR COUPER LE GAZ AU NIVEAU DE L'APPAREIL

1) Press the ON/OFF button on the remote or slide the wall mount switch to the "OFF" position.
2) If service is to be performed–you must disconnect power and shut off gas to the unit.
1) Appuyer sur la touche ON/OFF de la télécommande ou faites glisser l'interrupteur mural sur la position "OFF".
2) Lors de l'entretien de l'appareil, vous devez débrancher l'alimentation électrique et couper le gaz alimentant l'appareil.

DO NOT REMOVE THIS INSTRUCTION PLATE

NE PAS ENLEVER CETTE ÉTIQUETTE D'INSTRUCTIONS

919-649b

Proflame I Remote Control Operating Instructions

IMPORTANT: The Proflame Transmitter 1 is an integrated part of the Proflame 1 System, which consists of these elements:

- Proflame 1 Transmitter, to be used in conjunction with:
- Integrated Fireplaces Control (Proflame 1 DFG)

The Proflame 1 Transmitter provides for controlling the following hearth appliance functions:

1. Main Burner On/Off
2. Main Burner flame modulation (6 levels)
3. Thermostat and Smart thermostat functions
4. Accent light modulation (6 levels)**
5. Comfort Fan speed modulation (6 levels)**

** This feature is not available on all models.

The Proflame Transmitter uses a streamline design with a simple button layout and informative LCD display (Fig. 1). A Mode Key is provided to index between the features and a Thermostat Key is used to turn on/off or index through Thermostat functions (Fig. 1 & 2). Additionally, a Key Lock feature is provided (Fig. 22).

Figure 1: Proflame Transmitter

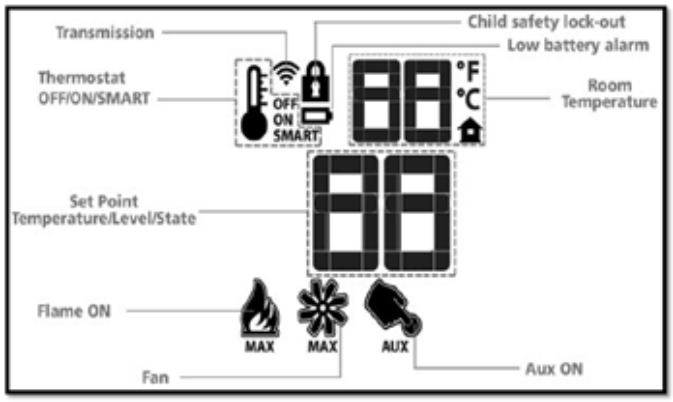

Figure 2: Transmitter LCD Display

TECHNICAL DATA REMOTE CONTROL	
Supply Voltage	4.5V (three 1.5V AAA batteries)
Ambient temperature ratings	0 - 50°C (32 - 122°F)
Radio Frequency	315 MHZ

WARNING: THE TRANSMITTER AND RECEIVER ARE RADIO FREQUENCY DEVICES. PLACING THE RECEIVER IN OR NEAR METAL MAY SEVERELY REDUCE THE SIGNAL

ATTENTION!

- Turn "OFF" the main gas supply of the appliance during installation or maintenance of the Receiver device.

- Turn "OFF" main gas supply to the appliance prior to removing or reinserting the batteries.

- In case of remote control malfunction, turn off the IFC device using the "ON/OFF" main switch.

- For installation / maintenance, switch off the IFC device removing main power supply plug.

OPERATING PROCEDURE

Pairing the remote control to the remote receiver/battery holder (if required)

Power the receiver. Press the PRG button located on the top right hand corner of receiver, see the receiver instruction (*). The Receiver will "beep" three (3) times to indicate that it is ready to synchronize with a Transmitter. Install the 3 AAA type batteries in the Transmitter battery bay, located on the base of the Transmitter. (fig. 3) With the batteries already installed in the Transmitter, push the On button. The Receiver will "beep" four times to indicate the Transmitter's command is accepted and sets to the particular code of that Transmitter. The system is now initialized.

(*) The receiver may be independent or integral to the IFC hearth appliance control module. The receiver instruction may not be independent when part of the IFC.

Note: Only use regular alkaline batteries. Do not use rechargeable or lithium batteries.

Figure 3: Battery Compartment

Temperature indication Display

With the system in the "OFF" position, press the Thermostat Key and the Mode Key at the same time. Look at the LCD screen on the transmitter to verify that a C or F is visible to the right of the room temperature display (Figures 4 & 5).

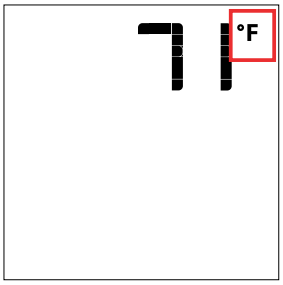

Figure 4: Remote Control display in Fahrenheit.

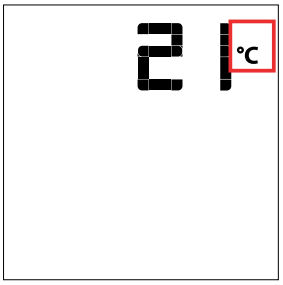

Figure 5: Remote Control display in Celsius.

Turn on the Appliance

With the system OFF, press the ON/OFF Key on the Transmitter. The Transmitter display will show some other active Icons on the screen. At the same time the Receiver will activate the appliance. A single "beep" from the Receiver will confirm reception of the command.

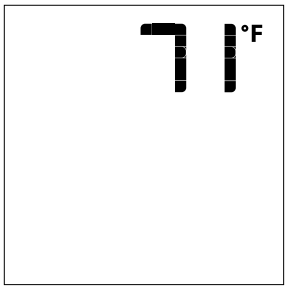

Figure 6: Remote Control display

Turn off the Appliance

With the system ON, press the ON/OFF Key on the Transmitter. The Transmitter LCD display will only show the room temperature (Fig. 6). At the same time the Receiver will turn off the appliance. A single "beep" from the Receiver confirms reception of the command.

Remote-Flame Control

The Proflame has six (6) flame levels. With the system on, and the flame level at the maximum in the appliance, pressing the Down Arrow Key once will reduce the flame height by one step until the flame is turned off. The Up Arrow Key will increase the flame height each time it is pressed. If the Up Arrow Key is pressed while the system is on but the flame is off, the flame will come on in the high position (Fig. 7 & 8). A single "beep" will confirm reception of the command.

Fig. 7

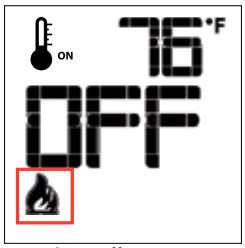

Flame Off

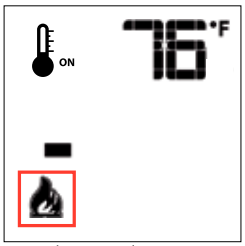

Flame Level 1

Fig. 8

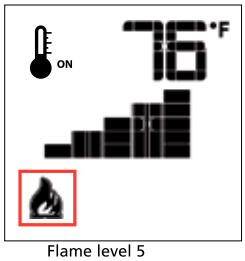

Flame level 5

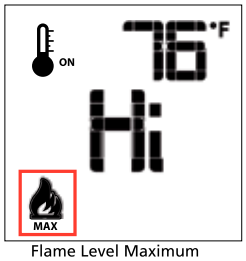

Flame Level Maximum

Room Thermostat (Transmitter Operation)

The Remote Control can operate as a room thermostat. The thermostat can be set to a desired temperature to control the comfort level in a room. To activate this function, press the Thermostat Key (Fig. 1). The LCD display on the Transmitter will change to show that the room thermostat is "ON" and the set temperature is now displayed (Fig. 9). To adjust the set temperature, press the Up or Down Arrow Keys until the desired set temperature is displayed on the LCD screen of the Transmitter.

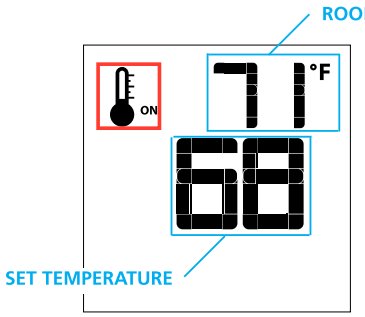

Figure 9

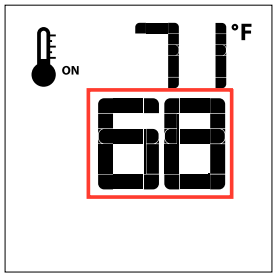

Figure 10

Smart Thermostat (Transmitter Operation)

The Smart Thermostat function adjusts the flame height in accordance to the difference between the set point temperature and the actual room temperatures. As the room temperature gets closer to the set point the Smart Function will modulate the flame down.
To activate this function, press the Thermostat Key (Fig. 1) until the word "SMART" appears to the right of the temperature bulb graphic (Fig. 11).
To adjust the set temperature, press the Up or Down Arrow Keys until the desired set temperature is displayed on the LCD screen of the Transmitter (Fig. 12).
Note. When Smart Thermostat is activated, manual flame height adjustment is disabled.

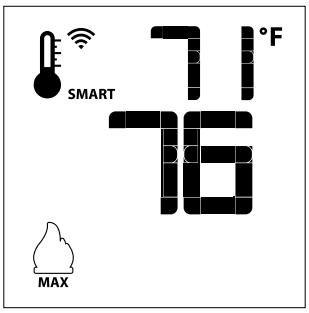

Figure 11: Smart Flame Function

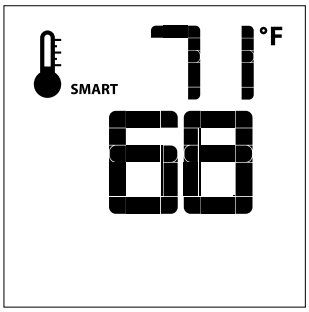

Figure 12

Fan Speed Control**

If the appliance is equipped with a hot air circulating fan, the speed of the fan can be controlled by the Proflame system. The fan speed can be adjusted through six (6) speeds. To activate this function use the Mode Key (fig.1) to index to the fan control icon (Fig. 13). Use the Up/Down Arrow Keys (fig.1) to turn on, off or adjust the fan speed (fig. 14). A single "beep" will confirm reception of the command.

Figure 13

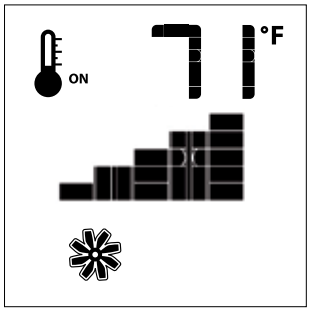

Figure 14

Remote dimmer control (Light)**

The auxiliary function controls the AUX power outlet by the dimmable light control. To activate this function use the Mode Key (fig. 1) to index to the AUX icon (fig. 15 & 16).
The intensity of the output can be adjusted through six (6) levels. Use the Up/Down Arrow Keys (fig.1) adjust the output level (fig. 16). A single "beep" will confirm reception of the command.

Note: This function is available only with the IFC Control Module.

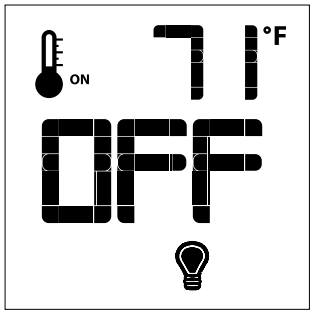

Figure 15

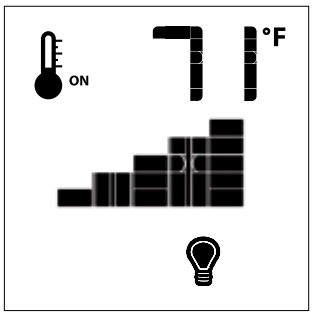

Figure 16

KEY LOCK

This function will lock the keys to avoid unsupervised operation.
To activate this function, press the MODE and UP Keys at the same time (fig. 21).
To de-activate this function, press the MODE and UP Keys at the same time.

Figure 18

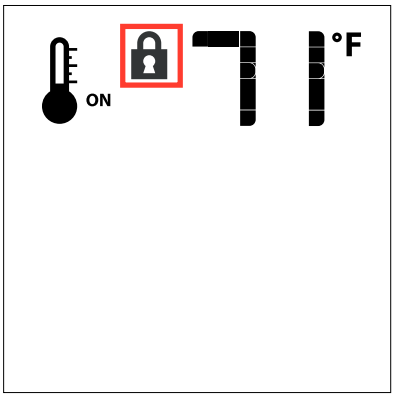

LOW BATTERY POWER DETECTION

Transmitter

The life span of the remote control batteries depends on various factors: quality of the batteries used, the number of ignitions of the appliance, the number of changes to the room thermostat set point, etc.
When the Transmitter batteries are low, a Battery Icon will appear on the LCD display of the Transmitter (Fig. 22) before all battery power is lost. When the batteries are replaced this Icon will disappear.

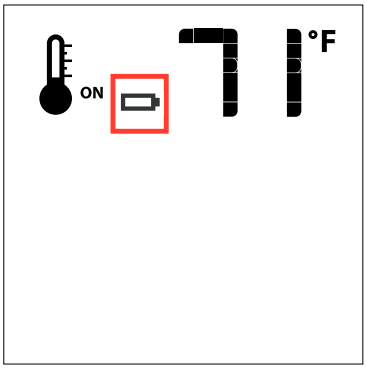

Figure 19

CPI/IPI Switch (See noted location of CPI/IPI switch)

This appliance comes equipped with a CPI/IPI switch.

The functions of both the CPI/IPI switch are as follows:

Continuous pilot (CPI) - A pilot that, once placed in operation, is intended to remain ignited continuously until it is manually interrupted.

Intermittent pilot (IPI) - A pilot that is automatically ignited when an appliance is called on to operate and which remains continuously ignited during each period of main burner operation. The pilot is automatically extinguished when each main burner operating cycle is completed

The mode of the fireplace is easily changed from an intermittent pilot ignition system (IPI) to a continuous pilot ignition system (CPI) by using the silver toggle switch located on the fireplace. (See noted location of CPI/IPI Switch)

The benefits of having CPI are as follows:

-Keeps venting primed for trouble free start-up under colder weather conditions or inversions.

-Keeps the unit glass warm, which decreases the amount of condensation on start-up.

-Provides owners with flexibility to choose a traditional continuous pilot. (7 day/Pilot on Demand)

The primary benefit of having the IPI function is a significant savings on fuel as the pilot will only run when there is a call for heat.

ENABLE / DISABLE functions on the Proflame I remote only.
1. Remove one battery from the remote.
2. Press and hold both the **ON/OFF** and the **MODE** button at the same time
3. Reinstall the battery (removed in Step 1) while still holding both buttons (keep holding both buttons and once all batteries are installed then release the **MODE** button only).
4. The screen will show **CFG**.
5. Use the up or down arrow button to program out the function on the remote.

Note: You should never program out the fan (If installed) feature on the remote.
It is not possible to remove the thermostat mode on this remote control.

The Surefire switch is located above the valve. This can be accessed by removing the bottom louver/panel.

Proflame I Remote Receiver Battery Replacement & Battery Backup if 120V Power is lost within home

If no fan control module or AC adaptor is installed, 4 AA batteries are mandatory in the remote receiver to operate the appliance when using the remote control.

How to replace/add the batteries on remote receiver (Proflame 1).
Note : If a wall switch cover plate is installed, first remove cover plate by removing 2 small phillips head screws

STEP 1

Move both the left/right slides as shown below.

The battery compartment will be pushed out slightly, to allow to easily extract it

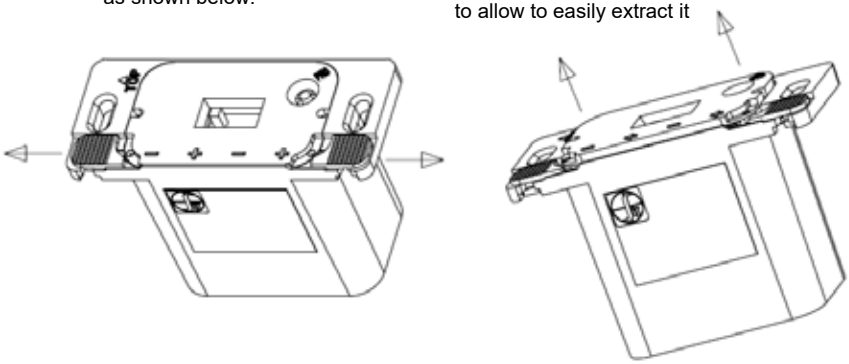

STEP 2

Extract the battery compartment from the remote receiver/battery holder

Replace 4 x AA batteries and insert the battery compartment back into remote receiver/battery holder

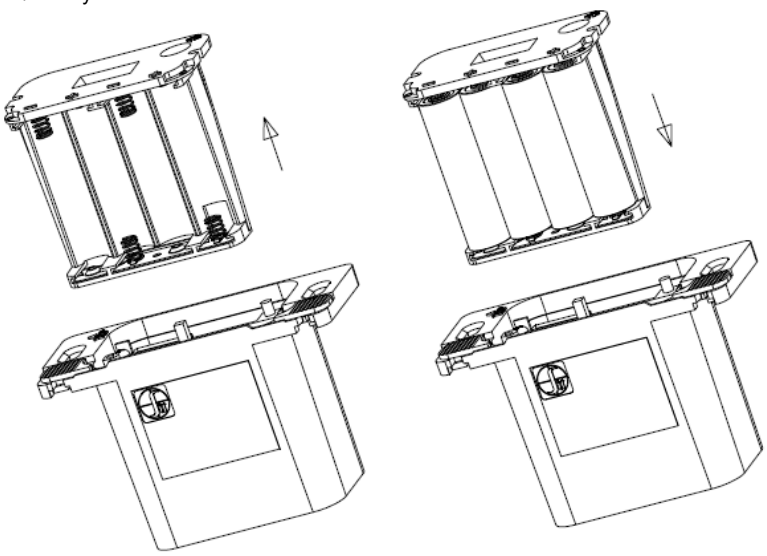

STEP 3

Keeping the battery compartment pressed in, close the left slide

Close the right slide

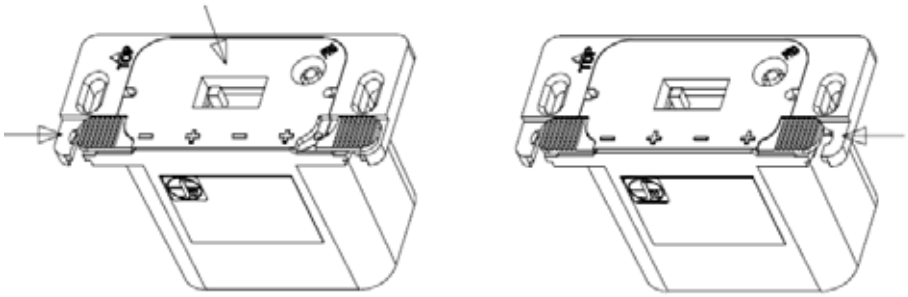

STEP 4 Reinstall wall cover plate with 2 Phillips head screws.

MA Code - CO Detector
(for the State of Massachusetts only)

5.08: **Modifications to NFPA-54, Chapter 10**

(2) Revise 10.8.3 by adding the following additional requirements:

(a) For all side wall horizontally vented gas fueled equipment installed in every dwelling, building or structure used in whole or in part for residential purposes, including those owned or operated by the Commonwealth and where the side wall exhaust vent termination is less than seven (7) feet above finished grade in the area of the venting, including but not limited to decks and porches, the following requirements shall be satisfied:

1. INSTALLATION OF CARBON MONOXIDE DETECTORS. At the time of installation of the side wall horizontal vented gas fueled equipment, the installing plumber or gasfitter shall observe that a hard wired carbon monoxide detector with an alarm and battery back-up is installed on the floor level where the gas equipment is to be installed. In addition, the installing plumber or gasfitter shall observe that a battery operated or hard wired carbon monoxide detector with an alarm is installed on each additional level of the dwelling, building or structure served by the side wall horizontal vented gas fueled equipment. It shall be the responsibility of the property owner to secure the services of qualified licensed professionals for the installation of hard wired carbon monoxide detectors

a. In the event that the side wall horizontally vented gas fueled equipment is installed in a crawl space or an attic, the hard wired carbon monoxide detector with alarm and battery back-up may be installed on the next adjacent floor level.

b. In the event that the requirements of this subdivision can not be met at the time of completion of installation, the owner shall have a period of thirty (30) days to comply with the above requirements; provided, however, that during said thirty (30) day period, a battery operated carbon monoxide detector with an alarm shall be installed.

2. APPROVED CARBON MONOXIDE DETECTORS. Each carbon monoxide detector as required in accordance with the above provisions shall comply with NFPA 720 and be ANSI/UL 2034 listed and IAS certified.

3. SIGNAGE. A metal or plastic identification plate shall be permanently mounted to the exterior of the building at a minimum height of eight (8) feet above grade directly in line with the exhaust vent terminal for the horizontally vented gas fueled heating appliance or equipment. The sign shall read, in print size no less than one-half (1/2) inch in size, **"GAS VENT DIRECTLY BELOW. KEEP CLEAR OF ALL OBSTRUCTIONS".**

4. INSPECTION. The state or local gas inspector of the side wall horizontally vented gas fueled equipment shall not approve the installation unless, upon inspection, the inspector observes carbon monoxide detectors and signage installed in accordance with the provisions of 248 CMR 5.08(2)(a)1 through 4.

(b) EXEMPTIONS: The following equipment is exempt from 248 CMR 5.08(2)(a)1 through 4:

1. The equipment listed in Chapter 10 entitled "Equipment Not Required To Be Vented" in the most current edition of NFPA 54 as adopted by the Board; and

2. Product Approved side wall horizontally vented gas fueled equipment installed in a room or structure separate from the dwelling, building or structure used in whole or in part for residential purposes.

(c) MANUFACTURER REQUIREMENTS - GAS EQUIPMENT VENTING SYSTEM PROVIDED. When the manufacturer of Product Approved side wall horizontally vented gas equipment provides a venting system design or venting system components with the equipment, the instructions provided by the manufacturer for installation of the equipment and the venting system shall include:

1. Detailed instructions for the installation of the venting system design or the venting system components; and

2. A complete parts list for the venting system design or venting system.

(d) MANUFACTURER REQUIREMENTS - GAS EQUIPMENT VENTING SYSTEM NOT PROVIDED. When the manufacturer of a Product Approved side wall horizontally vented gas fueled equipment does not provide the parts for venting the flue gases, but identifies "special venting systems", the following requirements shall be satisfied by the manufacturer:

1. The referenced "special venting system" instructions shall be included with the appliance or equipment installation instructions; and

2. The "special venting systems" shall be Product Approved by the Board, and the instructions for that system shall include a parts list and detailed installation instructions.

(e) A copy of all installation instructions for all Product Approved side wall horizontally vented gas fueled equipment, all venting instructions, all parts lists for venting instructions, and/or all venting design instructions shall remain with the appliance or equipment at the completion of the installation.

Installation Checklist

1. Locate appliance:
   a) Room location (Refer to "Locating Your Gas fireplace" section)
   b) Clearances to Combustibles (Refer to "Clearances" section)
   c) Mantel Clearances (Refer to "Combustible Mantel Clearances" section)
   d) Framing & Finishing Requirements (Refer to "Framing & Finishing" section)
   e) Venting Requirements (Refer to "Venting" section)

2. Assemble Top Standoffs and Top Facing Support and Side Nailing Strips (Refer to "Unit Assembly Prior to Installation" Section). NOTE: Must be done before installing unit into place.

3. Install vent (Refer to "Venting" sections).

4. Make gas connections. Test the pilot. Must be as per Diagram (Refer to "Pilot Adjustment " section).

   Convert to propane if desired (Refer to "Gas Line Installation" and "Conversion Kit from NG to LPG" sections).

5. Make electrical connections to receptacle supplied with unit (recommended).

6. Install standard and optional features. Refer to the following sections:

   a. Install 4AA batteries into remote receiver / hookup AC power adaptor
   b. Inner Panels or Brick Panels (Optional)
   c. Log Set Installation
   d. Standard Flush Door
   e. Fan Installation (Optional)
   f. Finishing Trim (Optional)
   g. Flush Panels and safety screen (Optional)
   h. Vignette Faceplate (Optional)

7. Final check.

This includes:

1. Clocking the appliance to ensure the correct firing rate (rate noted on label 31,000 Btu/h, after burning appliance for 15 minutes.

2. If required, adjusting the primary air to ensure that the flame does not carbon. First allow the unit to burn for 15-20 min. to stabilize.

CAUTION: Any alteration to the product that causes sooting or carboning that results in damage is not the responsibility of the manufacturer.

Locating Your Gas Fireplace

1. When selecting a location for your fireplace, ensure that the clearances are met.

2. The appliance must be installed on a flat, solid, continuous surface For example a wood, metal or concrete floor or in a raised (on the wall) application. The appliance must be installed on a metal or wood panel extending the full width and depth of the appliance.

3. The B36XTE Gas Fireplace can be installed in a recessed position or framed out into the room as in A, B, C and D. See Diagram 1.

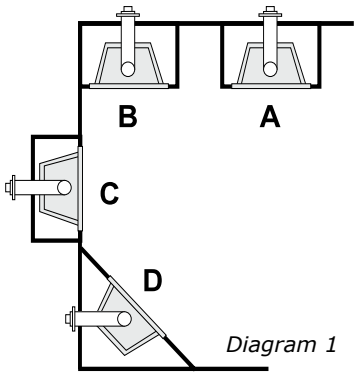

Diagram 1

A) Flat on Wall
B) Flat on Wall Corner
C) Recessed into Wall/Alcove
D) Corner

4. This appliance is Listed for bedroom installations using the standard Remote (millivolt thermostat system). Some areas may have further requirements, check local codes before installation.

5. The B36XTE Gas Fireplace are approved for alcove installations, see "Clearances" section for details.

6. We recommend that you plan your installation on paper using exact measurements for clearances and floor protection before actually installing this appliance. Have an authorized inspector, dealer, or installer review your plans before installation.

Note: For vent terminations refer to "Exterior Vent Termination Locations" section.

Clearances

The clearances listed below are Minimum distances unless otherwise stated:

A major cause of chimney related fires is failure to maintain required clearances (air space) to combustible materials. It is of the greatest importance that this fireplace and vent system be installed only in accordance with these instructions.

Caution Requirements
The top, back and sides of the fireplace are defined by standoffs. The metal ends of the standoff may **NOT** be recessed into combustible construction.

WARNING
Fire hazard is an extreme risk if these clearances (air space) to combustible materials are not adhered to. It is of greatest importance that this fireplace and vent system be installed only in accordance with these instructions.

B36XTE Clearance Requirements

Clearance:	Dimension	Measured From:
A: Mantel Height (min.) with Vignette +Vignette Trim (Stepped finish)	13" (330mm)	Top of Fireplace Opening
A: Mantel Height (min.) with Flush Panels and Safety Screen	13" (330mm)	Top of Fireplace Opening
A: Mantel Height (min.) with Vignette + Vignette Trim Finished Flush	22" (559mm)	Top of Fireplace Opening
B: Sidewall	12" (304mm) one side only	Side of Fireplace Opening
C: Ceiling	36-3/4" (933mm)	Top of Fireplace Opening
D: Mantel Depth (max.)	12" (304mm)	(See Dimension A) from Top of Fireplace Opening
E: Alcove Width	84" (2134mm)	Wall to Wall (Minimum)
F: Alcove Depth	36" (914mm)	Front to Back Wall (Maximum)
Notes:	0"	No Hearth Required

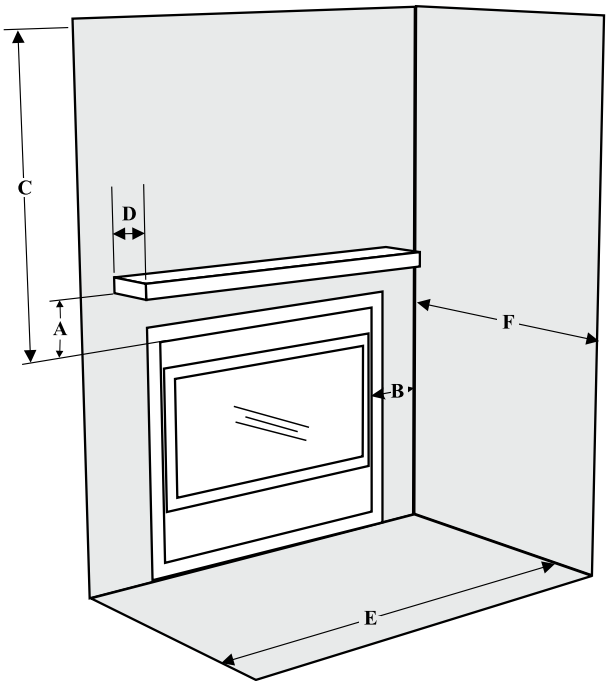

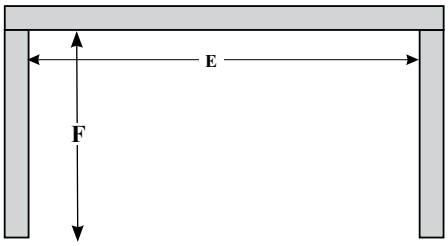

Alcove

Minimum Vent Clearances to Combustibles

Horizontal Top	2" (51mm)
Horizontal Side	1-1/2 " (38mm)
Horizontal Bottom	1-1/2" (38mm)
Vertical Vent	1-1/2" (38mm)

Combustible Mantel Clearances

Because of the extreme heat this fireplace emits, the mantel clearances are critical.

Combustible mantel clearances from top of unit are shown in the diagram below.
Note: Mantel starts at *1" deep and ends at *12" deep. **<u>**For Vignette with Vignette Finishing Trim flush finish</u>**, all materials (framing & finishing) below the mantel and the width of the Vignette finishing trim, (37-3/4") must be non-combustible if a lower mantel is desired. **The non combustible mantle when installed at a lower overall height may not be lower than 6 inches from the top of the fireplace opening.**

Note: Ensure the paint that is used on the mantel and the facing is "heat resistant" or the paint may discolour.

Mantel Clearance with Vignette + Vignette Trim (stepped finish) or Flush Panels and Safety Screen

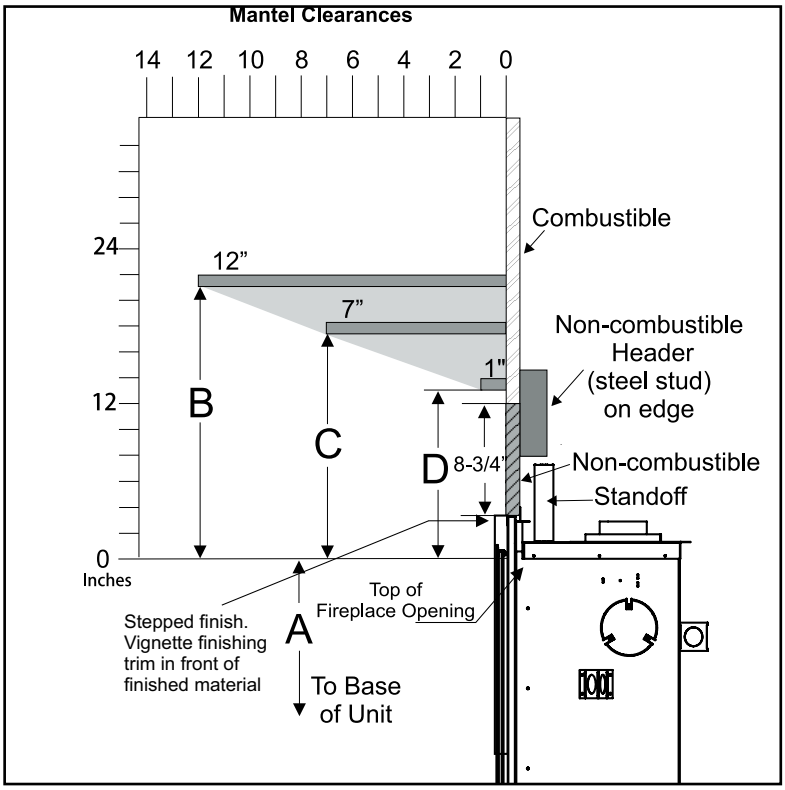

Mantel Clearance with Vignette and Vignette Finishing Trim (flush finish)

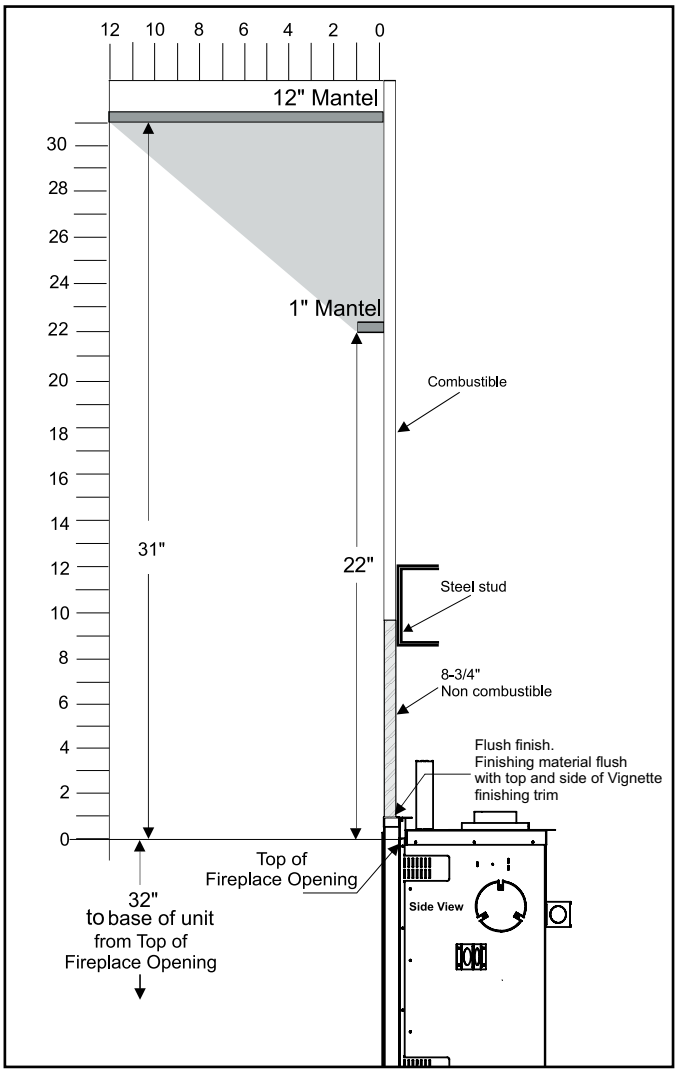

Mantel Clearances B36XTE	A	B	C	D
From Top of Fireplace Opening	32" (813mm)	22" (559mm)	17-1/2" (445mm)	13" (330mm)

Note: Ensure the paint that is used on the mantel and the facing is "High Quality" or the paint may discolour.

Mantel Leg Clearances

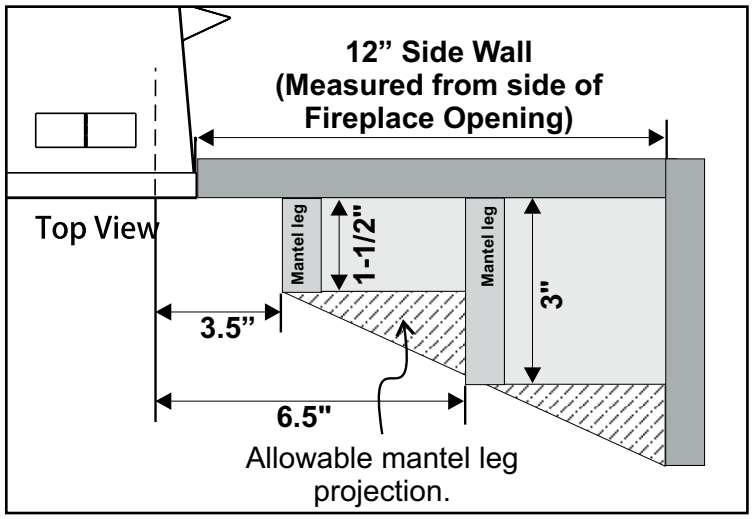

Framing

1. Determine the total thickness of facing material (e.g. non combustible plus ceramic tiles) to allow the finished surface to be flush with the front of the unit. Total facing thickness can vary from 1/2" (13mm) to 1-1/4" (32mm) thick with Vignette only and Safety Screen and Flush Panels. When installing the Vignette + Vignette Finishing Trim Flush Finish the facing thickness is up to maximum of 3-1/8".

Vignette + Vignette Trim (Stepped Finish) or with Flush Panels and Safety Screen

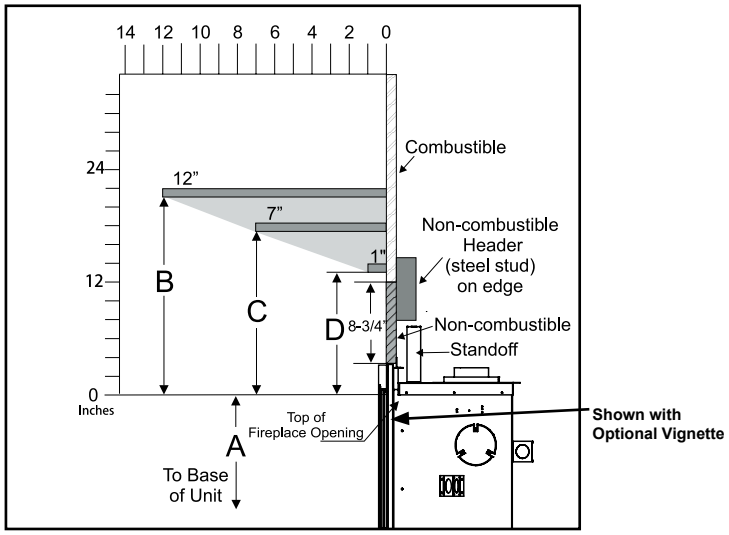

Diagram 1

Note: Secure the non-combustible board directly above the unit as shown. Install a steel stud directly above the unit as shown to secure the non -combustible material.

Install Side Nailing Strips, Top Facing Support, and Top Stand-offs before unit is slipped into position. See the "Unit Assembly Prior to Installation" section for assembly details.

Vignette + Vignette Finishing Trim (Flush Finished)

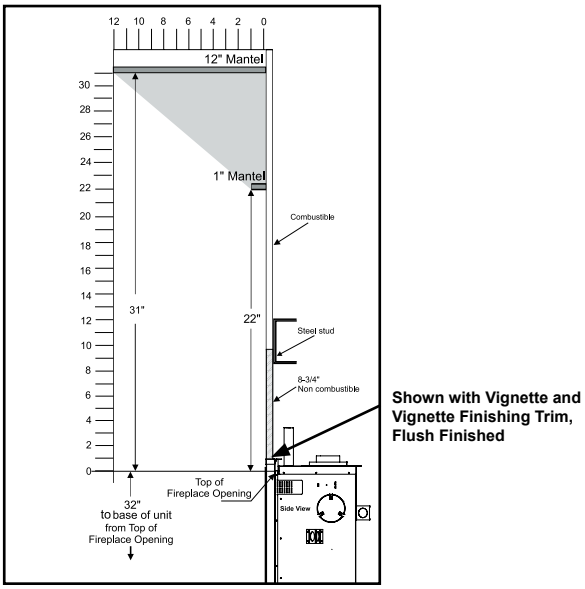

Diagram 2

2. For exterior walls, insulate the enclosure to the same degree as the rest of the house, apply vapour barrier and drywall, as per local installation codes. (Do not insulate the fireplace itself.)

3. The top of the fireplace opening must not be closer than 36-3/4" (933mm) to the ceiling.

Framing with Vignette + Vignette Trim (Stepped Finish) or with Flush Panels and Safety Screen

- see next page for framing for Vignette and Vignette trim (flush finish)

Framing Dimensions	Description	B36XTE	
M	Framing Width	40-5/8"(1032mm)	
N	Framing Height	42" (1067mm)	
O (Rear Vent)	Framing Depth - Rear Vent	20-3/4" (527mm)	
O (Top Vent)	Framing Depth - Top Vent	20-1/2" (521 mm)	
P (Top Vent)	Corner Facing Wall Width	48 - 5/8" (1235mm)	
P (Rear Vent)	Corner Facing Wall Width	53" (1346mm) AstroCapXL 61-1/2" (1562mm) - other approved caps	
Q (Top Vent)	Corner Facing Wall Width	68-3/4" (1746mm)	
Q (Rear Vent)	Corner Facing Wall Width	75" (1905mm) AstroCapXL 87" (2209mm) - other approved caps	
R (Rear Vent)	Framed Chase Ceiling - Rear	42" (1067mm)	
R (Top Vent)	Framed Chase Ceiling - Top	50-1/2" (1283mm)	
S (Rear Vent)	Vent Centerline Height - Rear	26-1/2" (673mm)	
S (Top Vent) (5" x 8")	Vent Centerline Height - Top	42-1/8" (1070mm) Flex	44-1/4" (1123mm) Rigid
S (Top Vent) (4" x 6-5/8")	Vent Centerline Height - Top	-	49" (1245mm) Rigid
T	Gas Connection Height	1-1/2" (38mm)	
U	Gas Connection Inset	4-1/8" (105mm)	
V	Gas Connection Width	3-1/4" (82mm)	
W	Non-combustible Height	8-3/4" (222mm)	

**** Important: Framing height requires consideration of the hearth depth. Dimension N = N + the thickness of the installed hearth.**

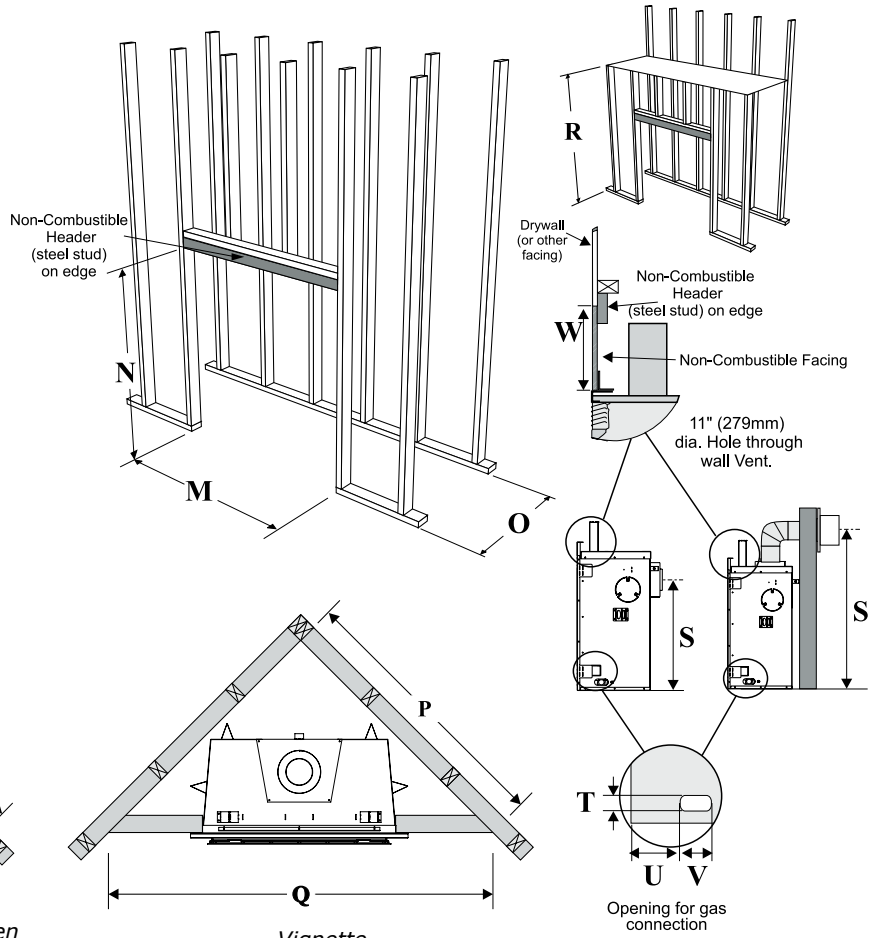

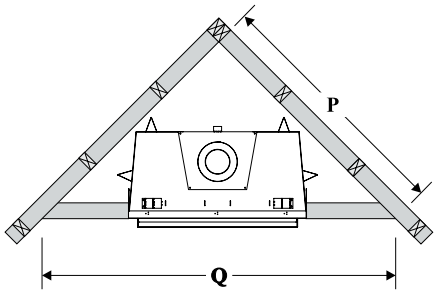

Optional Flush Panels and Safety Screen

Vignette

Framing with Vignette and Vignette Trim (Flush Finish)

Framing Dimensions	Description	B36XTE	
M	Framing Width	42-1/4"(1073mm)	
N*	Framing Height	42" (1067mm)	
O (Rear Vent)	Framing Depth - Rear Vent	22-1/8" (559mm)	
O (Top Vent)	Framing Depth - Top Vent	21-7/8" (553 mm)	
P (Top Vent)	Corner Facing Wall Width	51 - 5/16" (1303mm)	
P (Rear Vent)	Corner Facing Wall Width	55-11/16" (1414mm) AstroCapXL 64-3/16" (1630mm) - other approved caps	
Q (Top Vent)	Corner Facing Wall Width	72-1/2" (1842mm)	
Q (Rear Vent)	Corner Facing Wall Width	78-3/4" (2000mm) AstroCapXL 90-3/4" (2305mm) - other approved caps	
R (Rear Vent)	Framed Chase Ceiling - Rear	42" (1067mm)	
R (Top Vent)	Framed Chase Ceiling - Top	50-1/2" (1283mm)	
S (Rear Vent)	Vent Centerline Height - Rear	26-1/2" (673mm)	
S (Top Vent) (5" x 8")	Vent Centerline Height - Top	42-1/8" (1070mm) Flex	44-1/4" (1123mm) Rigid
S (Top Vent) (4" x 6-5/8")	Vent Centerline Height - Top	-	49" (1245mm) Rigid
T	Gas Connection Height	1-1/2" (38mm)	
U	Gas Connection Inset	4-1/8" (105mm)	
V	Gas Connection Width	3-1/4" (82mm)	
W	Non-combustible Height	8-3/4" (222mm)	
*NOTE: When using the optional Vignette finishing trim, this can be installed as a 3-sided or 4 sided finish trim. If choosing to use this as a 4 sided finish trim the framing would need to be increased by 11/16" inches minimum in order for this to fit. This must be to the finished floor. (Eg :42" framing height + 11/16" to bottom of 4-sided finishing trim +1/2 thick finished floor = 43 3/16			

**** Important: Framing height requires consideration of the hearth depth. Dimension N = N + the thickness of the installed hearth.**

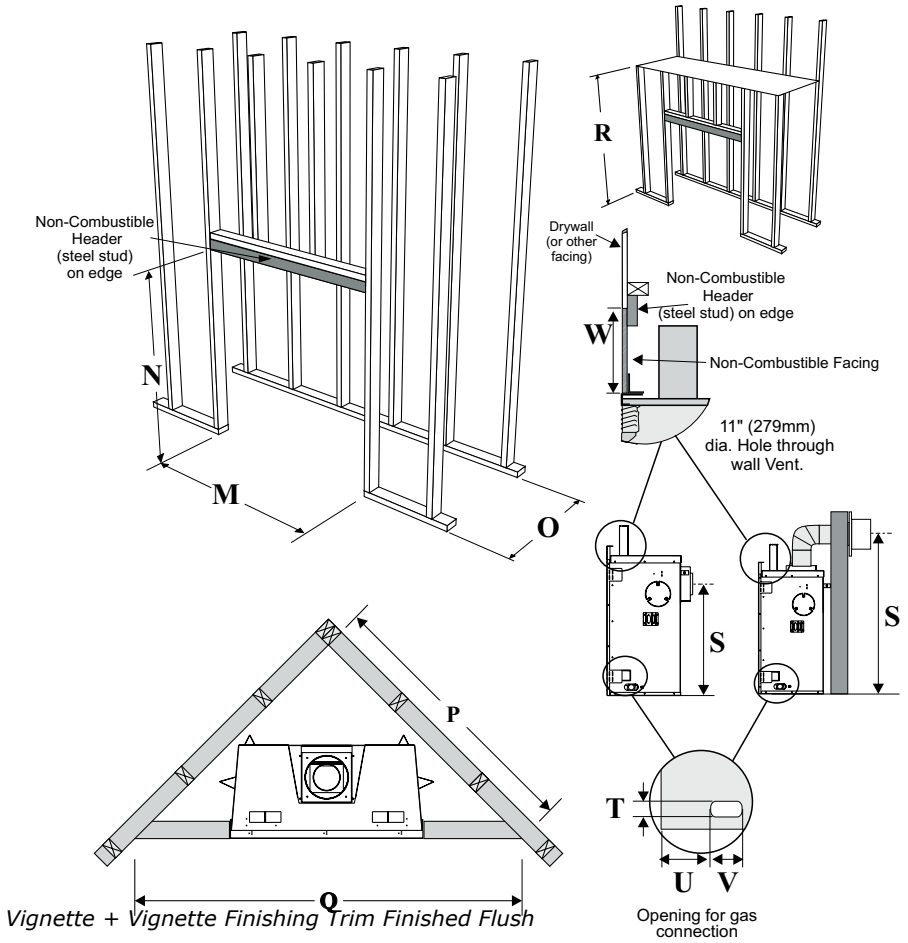

Vignette + Vignette Finishing Trim Finished Flush

Non-Combustible Requirements

Vignette +Vignette Trim (Stepped Finish) or with Flush Panels and Safety Screen

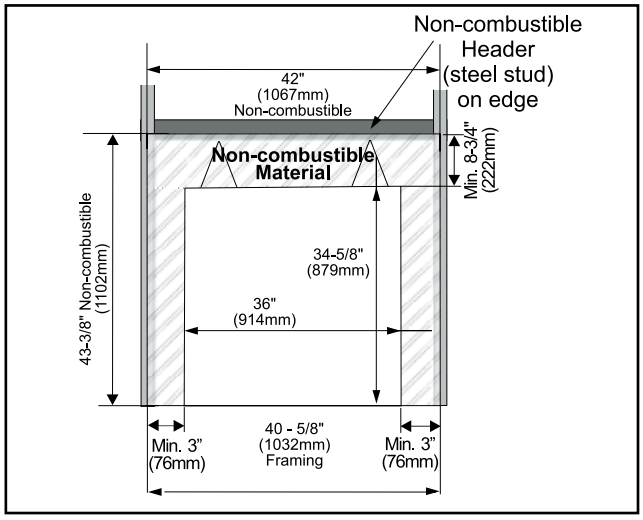

Diagram 1

Vignette + Vignette Finishing Trim (Flush Finish)

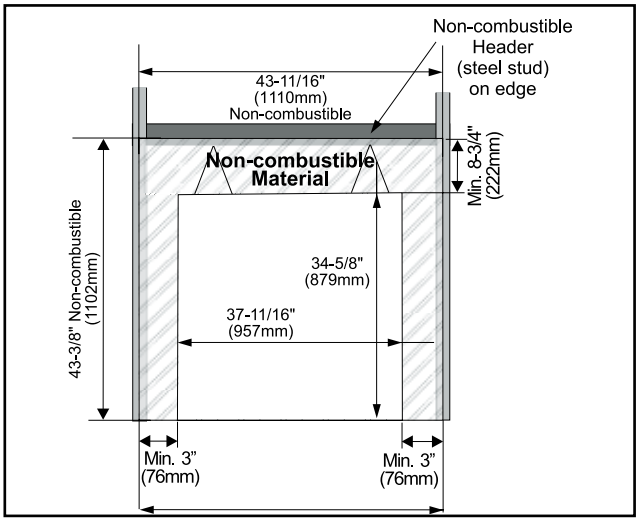

Diagram 2

Wall Mount On / Off Switch and Remote Receiver Installation
Required for all installations - including Proflame remote controls

IMPORTANT INSTALLATION NOTE:

The Receiver must be placed inside the supplied (Low Voltage) junction type wall box and installed into the wall only.

DO NOT INSTALL WITHIN THE CONFINES OF THE FIREPLACE.

Remote Receiver Installation

1. Install the low voltage junction box to the framing, at desired location within 9 ft. (2.7 meters) from fireplace.
2. Feed the 12 pin connector through the opening at back of junction box.
3. Connect the 12 pin connector to the back of the receiver.
4. Install the Receiver in the Low Voltage Junction box.
5. Insert the 4 AA type batteries in the battery compartment with the correct polarity (only required if no fan control module or AC adaptor is installed).
6. Place the slider into the cover plate.
7. Put the Receiver switch in the “OFF” position, to allow correct lineup for slider switch.
8. Make sure the Receiver and cover plate words “ON” and “UP” are on the same side.
9. Align the slider with the switch on the Receiver and couple the switch into the slider.
10. Align the screw holes.
11. Using the two (2) screws provided secure the cover plate to the Receiver.

Proflame Receiver

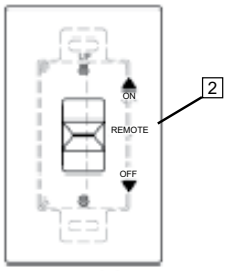

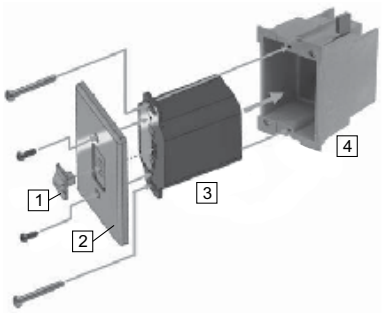

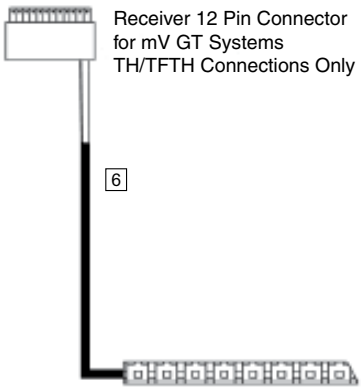

Item	Part No.	Description
1	N/A	Slider Switch (included with wall plate)
2	911-335	Wall Plate - White
	911-343	Wall Plate - Black
3	911-338/P	Remote Receiver
4	N/A	J-Box
5	910-369	Low Voltage Junction Box
6	911-032	Remote Receiver Wire Harness

10 ft. wire harness with 12 pin connector

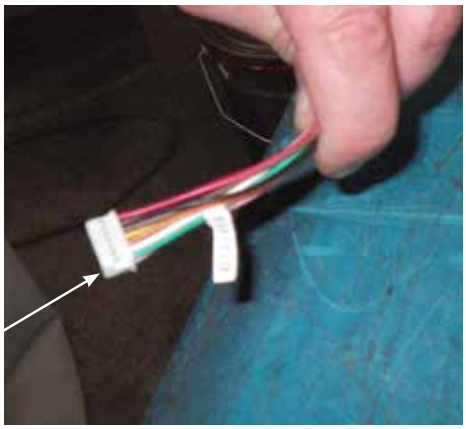

Diagram 1

Finishing

IMPORTANT FINISHING DETAIL NOTE:

Before placing unit into final position - it is important to know the total thickness / height of finished hearth (tile, carpet, etc.) The base of the fireplace should be level or higher than the finished hearth height.

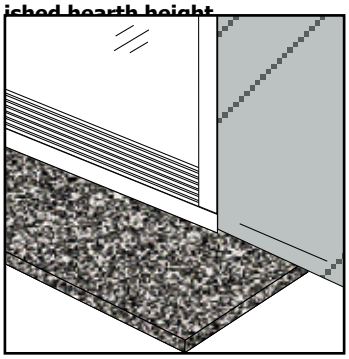

Diagram 1

Note: All non-combustible facing material should butt up cleanly to the flanges around the firebox opening.

Rough edges will be visible from the front view with the flush louvers or flush panels - if not using the optional finishing trim.

To maintain a clean finished edge - it is recommended to install the non-combustible facing material with the finished edge against the fireplace / nailing strips.

Alternatively, you can use J Style Trim or Metal Corner Bead to cover cut edges of the non-combustible facing material.

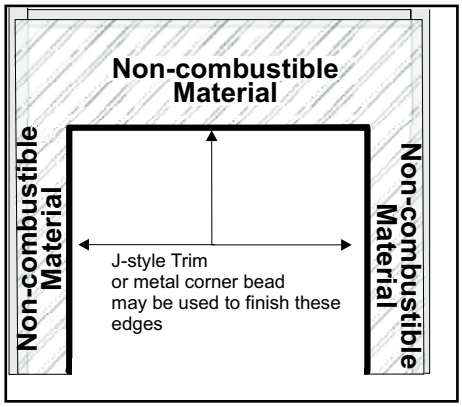

Diagram 2

Important:

Finishing materials such as tile, river rock, etc, must not protrude beyond the front facing flanges at the sides and top of the firebox opening.

Unit Assembly Prior to Installation

Before You Start

The Top Facing Support, the Side Nailing Strips, the 2 Top Standoffs and the Flue Collar must be correctly positioned and attached before the fireplace is moved into position.

Top Standoff Assembly

The top standoffs are shipped in a flat position and must be folded into shape and attached.

1. Take each standoff and bend into the correct shape. Bend up at the bend lines until the screw holes in the standoff and the pre-punched slots on the fireplace top line up. Be sure to use correct slots, they are marked.
2. Attach the standoff securely to the top with 2 screws per standoff (on opposite corners).

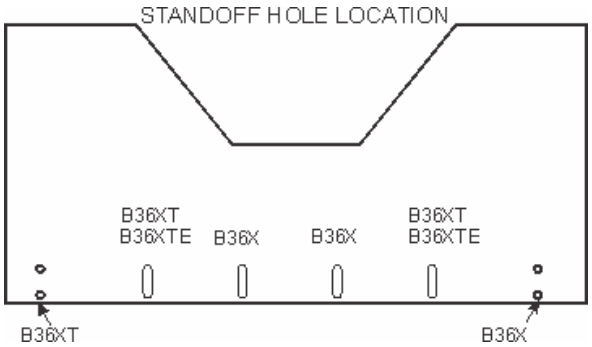

Top Facing Support (if not using Vignette Finishing Trim)

Determine the total thickness of facing material (e.g. non combustible, drywall or wood plus ceramic tiles) to allow the finished surface to be flush with the front of the unit. Total facing thickness can vary from 1/2" (13mm) to 1-1/4" (32mm) thick.

The Top Facing Support can be mounted in 3 different positions depending on the thickness of the facing material.

Screw Position	Facing Material Depth
A	1/2"/ 13mm
B	7/8"/ 22mm
C*	1-1/4"/ 32mm

* For "C" screw position the top facing support is reversed.

1. Mount Top Facing Support using the 3 supplied screws into the three pre-punched screw holes on the top front of the unit. Use hole positions A, B, or C depending on your facing depth.

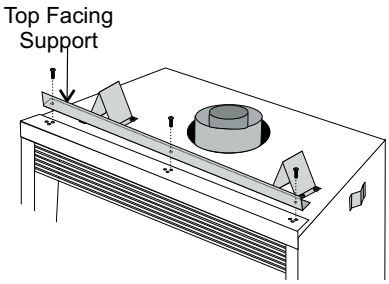

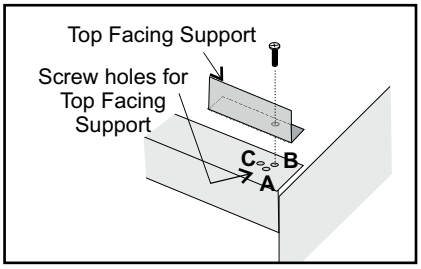

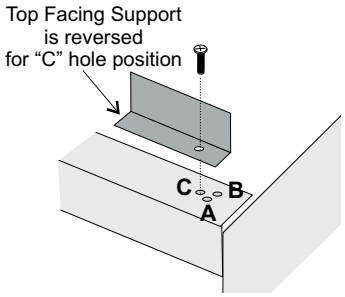

"C" Screw Position:
For a facing material depth of 1-1/4" (32mm), the top facing support must be reversed.

NOTE:

If finishing flush with the Vignette Finishing Trim– there are 2 nailing strips that may be used. If the total thickness of material is between 2- 3/8 inches to 3-1/8 inches,use the nailing strip provided for positions A,B,C. Nailing strip marked D may be discarded.
If the thickness of material is between 1/2" to 1-7/8 "use nailing strip provided marked D. The other nailing strip for positions A,B,C may be discarded.

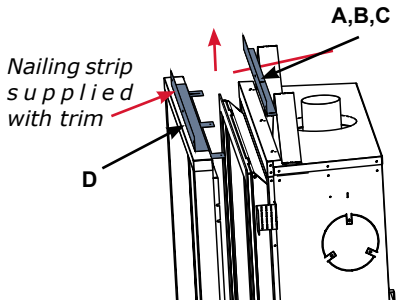

Determine the total thickness of facing material (e.g. drywall or wood plus ceramic tiles) to allow the finished surface to be flush with the front of the unit. Total facing thickness can vary from 1/2" (13mm) to 3-1/8" thick.

When using the Vignette finishing trim the adjustment would be as follows:

Screw Position	Facing Material depth
A	2-3/8"
B	2-3/4"
C	3-1/8"
D	1/2" to 1-7/8"

Side Nailing Strips

The side nailing strips come attached to the unit. There are 2 plates, one on the top and bottom that can be folded out as required.

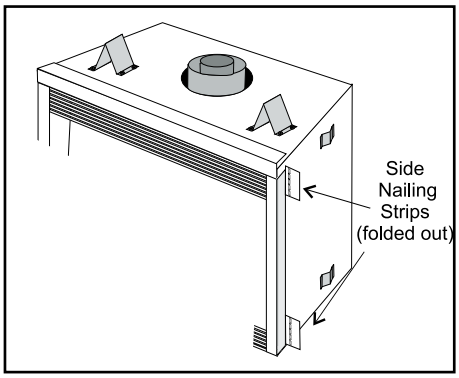

If finishing flush with the Vignette Finishing Trim -bend nailing strips around side trim pieces as shown below.

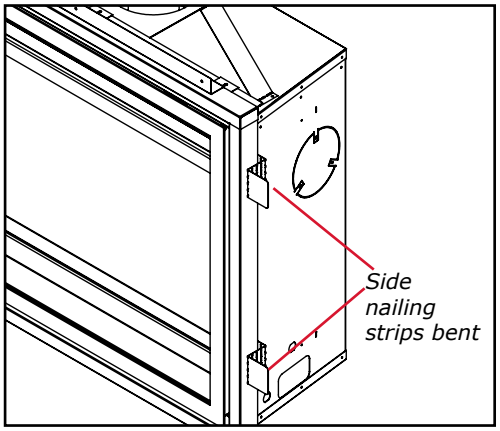

Side nailing strips can be adjusted from 1/2" to 2-5/8".

Conversion to Top Vent

Note: This conversion must be done prior to the unit being placed in position.
The unit comes equipped as a rear vent unit. These instructions are to be used, only if the unit is going to be top vented.

Top Collar Assembly Kit	
1	Intake Collar Assembly with Gasket
1	Intake Cover Plate with Gasket
1	Top/Rear Exhaust Assembly with Gasket
1	Heat Deflector
1	Baffle Plate
29	1/4" x 1/2" Screws (4 spares)
1	Restrictor
1	Intake Collar Gasket (spare)
1	Exhaust Assembly Gasket (spare)
1	Insulation Plate Cover
1	Insulation Filling

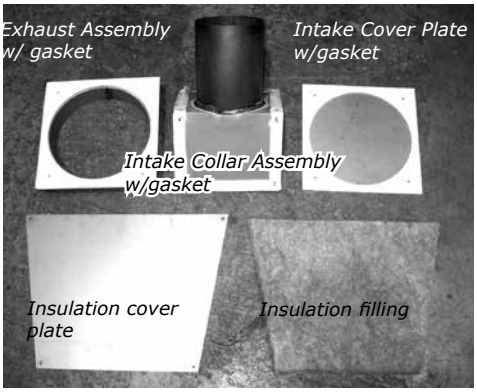

Note: Components shown are installed on unit.

1. Remove the door assembly by releasing the adjustable latches and lifting up off the door frame assembly.

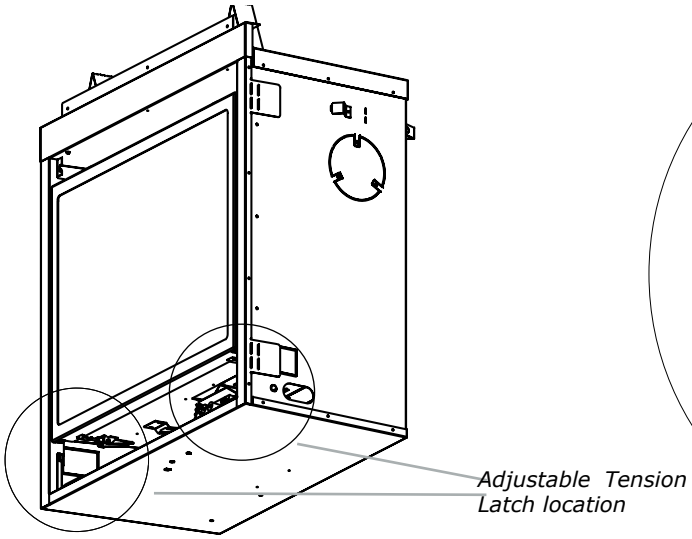

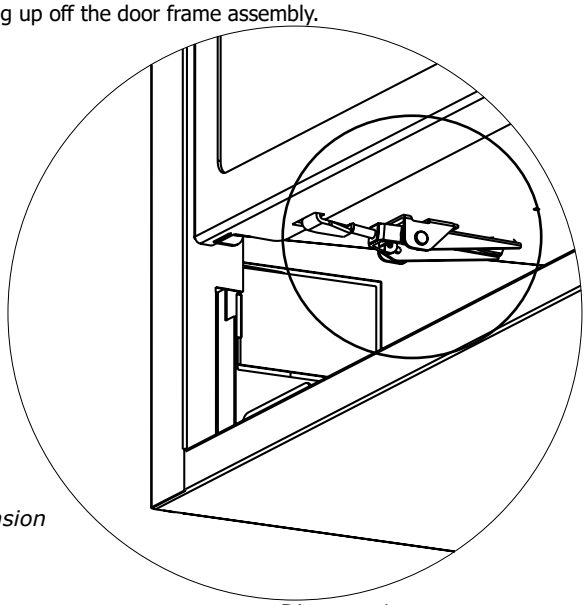

Diagram 1

2. From inside the firebox, remove the top heat deflector by removing 2 screws.

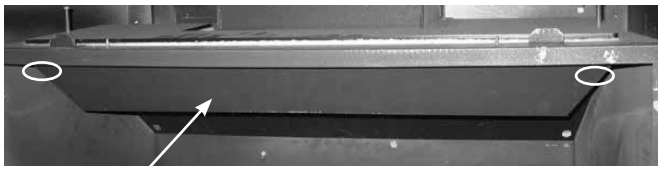

Diagram 2

3. From inside the firebox, remove the baffle plate by removing 4 screws - remove top front screw first. See Diagram 3.

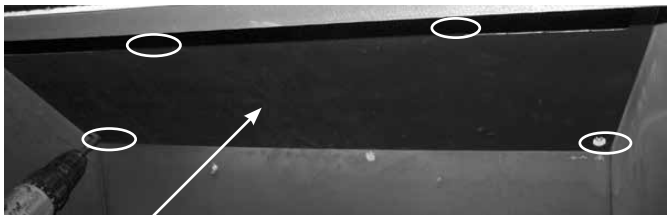

Diagram 3

4. From the inside of the firebox, remove the exhaust assembly by removing the 8 screws. See Diagram 4.

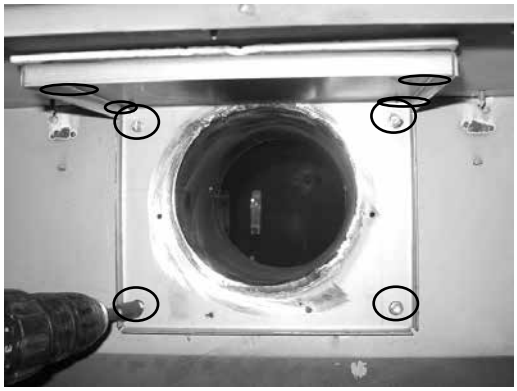

Diagram 4

5. From the outside rear of the firebox, remove the intake collar assembly. Remove the 4 - 1/4" x 1/2" screws. See Diagram 5.

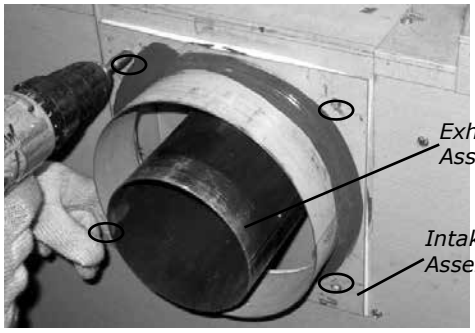

Diagram 5

6. From the outside top of the firebox - remove top insulation cover plate and insulation filling - by removing 4 screws. See Diagram 6. Recycle cover plate and discard insulation filling, keep the 4 screws.

Diagram 6

7. From the outside top of the firebox - remove the intake cover plate by removing the 4 - 1/4" x 1/2 " screws. See Diagram 7.

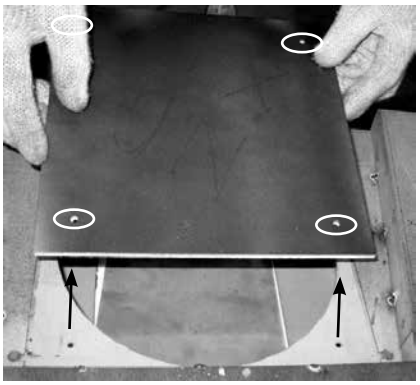

Diagram7

Before proceeding to Step 8, inspect condition of all gaskets. DO NOT install parts with damaged gaskets. Replace if necessary with spare gaskets supplied.

8. From the inside of the firebox, place the exhaust assembly into position as shown in Diagram 8 and secure with 8 - 1/4" x 1/2" screws (Diagram 9). Ensure all screws are tight, but do not over tighten. <u>All 8 screws must be used.</u>

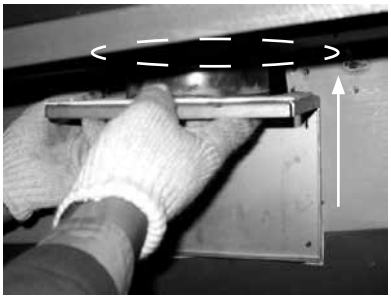

Diagram 8

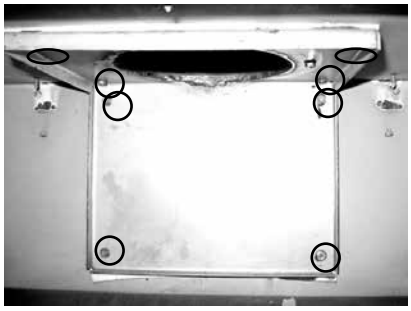

Diagram 9

9. From the outside top of the firebox, install the intake collar assembly. Secure with 4 - 1/4" x 1/2" screws. Ensure all screws are tight, but do not over tighten. <u>All 4 screws must be used.</u>

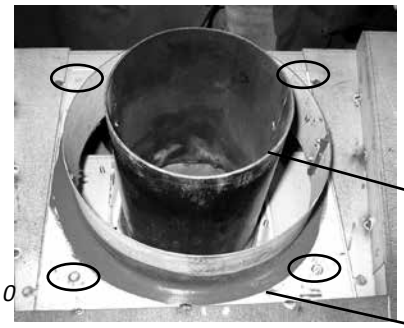

Diagram 10

10. From the outside rear of the firebox, install the intake cover plate with 4 - 1/4" x 1/2" screws. Ensure all screws are tight, but do not over tighten. <u>All 4 screws must be used.</u>

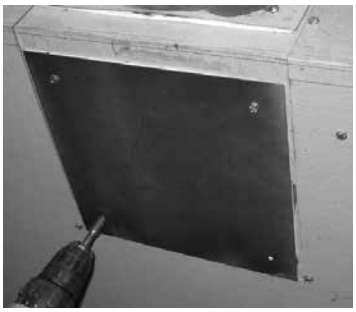

Diagram 11

11. Set vent restrictor accordingly - see next page.

12. From inside the firebox, re-install the baffle plate and heat deflector - reverse steps 2 & 3.

13. From inside the firebox, reinstall the top heat deflector by placing 2 screws.

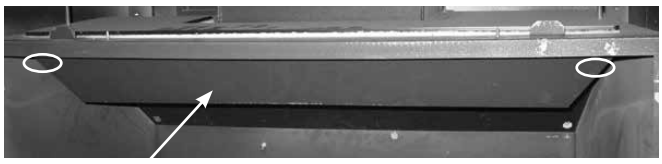

Heat Deflector *Diagram 12*

14. From inside the firebox, reinstall the baffle plate by placing 4 screws - replace top front screw first. Leave loose - until rear screws installed. See Diagram 3.

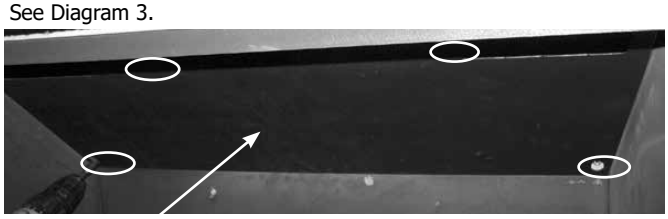

Baffle Plate *Diagram 13*

Note: Reuse existing screw holes - do not make new holes. Tighten screws.

Vent Restrictor, Baffle & Heat Deflector Installation

Note: The vent restrictor & baffle must be installed prior to Optional Panel Installation.

1. Determine the venting configuration.

2. Remove top heat deflector and baffle plate (reverse of steps 5 & 6).

3. Go to venting arrangements section (in the manual) to determine if a vent restrictor setting is required.

Note: The vent restrictor does not apply to rear vent applications.

4. Align the vent restrictor plate to the required vent restrictor position as per the Diagrams shown.

5. Once the vent restrictor plate is in the required position, secure with 2 - 1/4" x 1/2" screws. Ensure all screws are tight, but do not over tighten. (See Diagram 2).

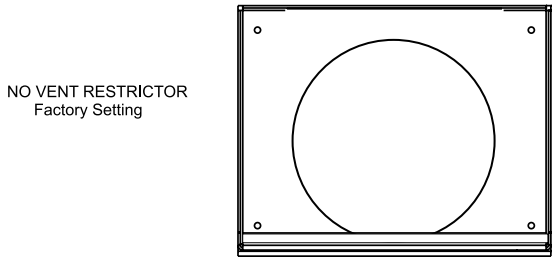

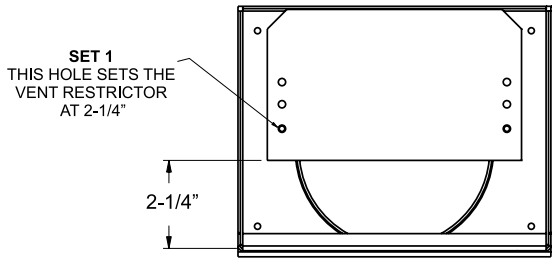

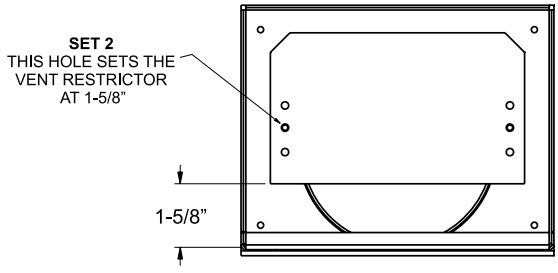

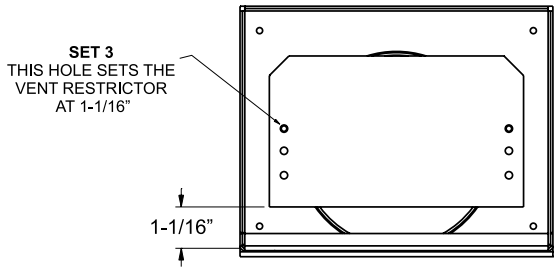

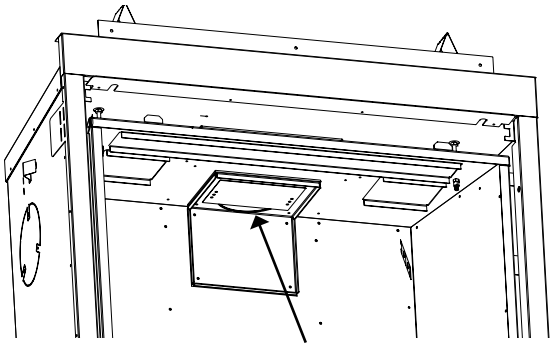

Diagram 2: Vent restrictor installed on top exhaust assembly

6. From **inside** the firebox, install the baffle plate with 4 - 1/4" x 1/2 " screws. Ensure all screws are tight, but do not over tighten.

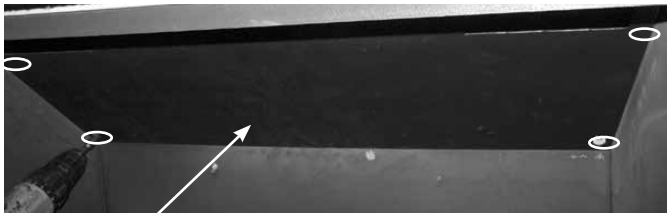

Baffle Plate *Diagram 3*

Note: If installing brick/optional panels, see brick/optional panel instructions before proceeding to next step.

7. From **inside** the firebox, install the top heat deflector with 2 - 1/4" x 1/2" screws. Ensure all screws are tight, but do not over tighten.

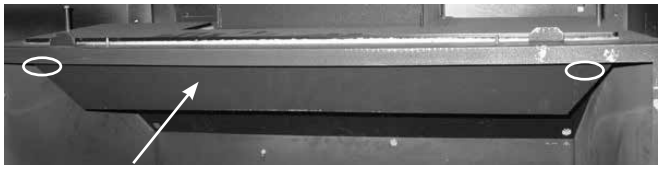

Heat Deflector *Diagram 4*

Venting Introduction

The B36XTE uses the "balanced flue" technology Co-Axial system. The inner liner vents products of combustion to the outside while the outer liner draws outside combustion air into the combustion chamber thereby eliminating the need to use heated room air for combustion and losing warm room air up the chimney.

Note: These flue pipes must not be connected to any other appliance.

The gas appliance and vent system must be vented directly to the outside of the building, and never be attached to a chimney serving a separate solid fuel or gas burning appliance. Each direct vent gas appliance must use it's own separate vent system. Common vent systems are prohibited.

Exterior Vent Termination Requirements

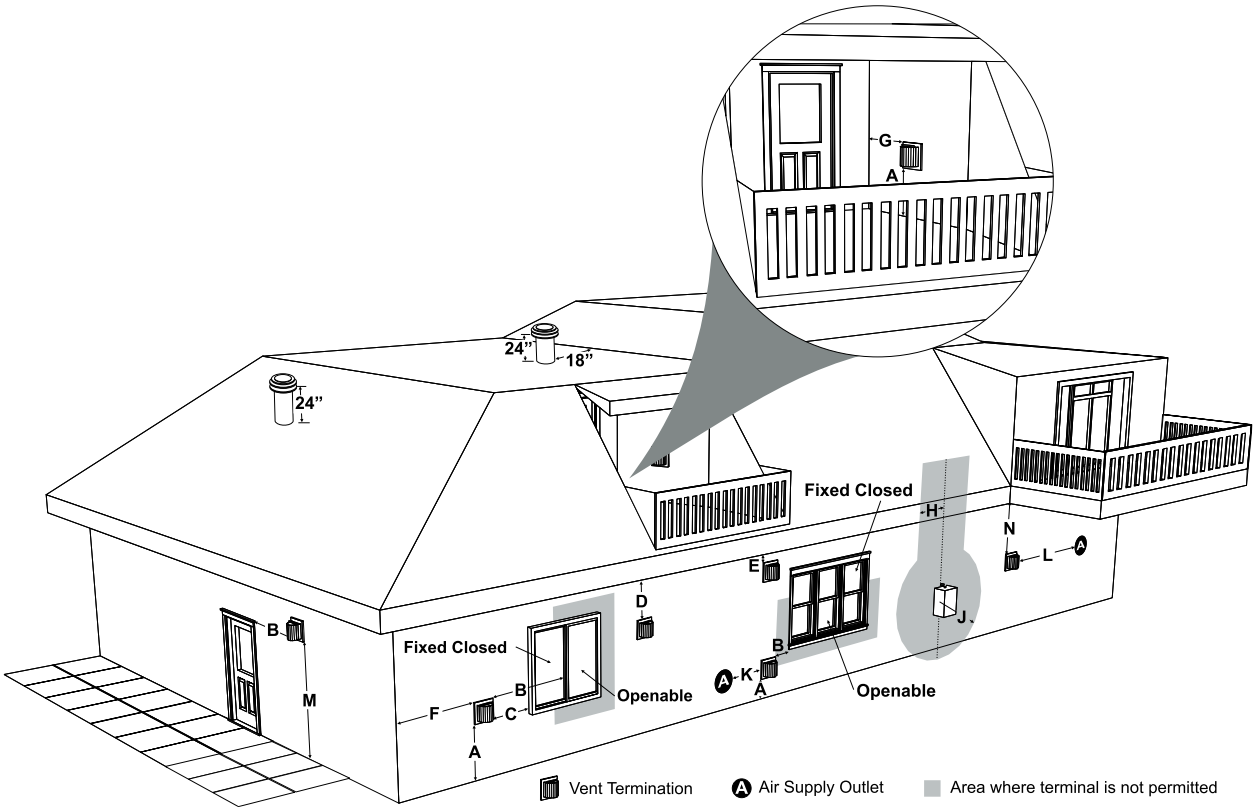

	Minimum Clearance Requirements	Canada[1]	USA[2]
A	Clearance above grade, veranda, porch, deck, or balcony	12"(30cm)	12"(30cm)
B	Clearance to window or door that may be opened	12"(30cm)	9" (23cm)
C	Clearance to permanently closed window	*	*
D	Vertical clearance to ventilated soffit located above the terminal within a horizontal distance of 2 feet (61cm) from the center line of the terminal (check with the local code)	24"(60cm)	24"(60cm)
E	Clearance to unventilated soffit	19"(48cm)	19"(48cm)
F	Clearance to outside corner: with ***AstroCap*** Termination Cap.	13"(33cm)	13"(33cm)
	Clearance to outside corner: with all other approved Termination Caps.	13"(33cm)	13"(33cm)
G	Clearance to inside corner: with ***AstroCap*** Termination Cap	11"(28cm)	11"(28cm)
	Clearance to inside corner: with all other approved Termination Caps.	11"(28cm)	11"(28cm)
H	Clearance to each side of center line extended above meter/regulator assembly	36"(90cm)[a]	*
J	Clearance to service regulator vent outlet	36"(90cm)	*
K	Clearance to non-mechanical air supply inlet to building or the combustion air inlet to any other appliance	12"(30cm)	9" (23cm)
L	Clearance to a mechanical air supply inlet #3' (91cm) above if within 10' (3m) horizontally.	72"(1.8m)	36"(90cm)[b]
M	Clearance above paved sidewalk or a paved driveway located on public property †	84"(2.1m)†	*
N	Clearance under veranda, porch, deck, or balcony ‡	12"(30cm)‡	*

[1] In accordance with current CSA B149.1, *Natural Gas and Propane Installation Code*
[2] In accordance with the current *ANSI Z223.1/NFPA 54, National Fuel Gas Code*
† A vent shall not terminate directly above a sidewalk or paved driveway which is located between two single family dwellings and serves both dwellings
‡ Permitted only if veranda, porch, deck, or balcony is fully open on a minimum of two sides beneath the floor
* Clearance in accordance with local installation codes and the requirements of the gas supplier
[a] 3 feet (91cm) within a height of 15 feet (4.5m) above the meter / regulator assembly
[b] 3 feet (91cm) above - if within 10 feet (3m) horizontally

Top Vent Reducer Installation from 5" x 8" to 4" x 6-5/8"

1. Apply a bead of Millpack around the base of the inner vent collar. Slide the inner adaptor over the collar and secure with 3 screws.

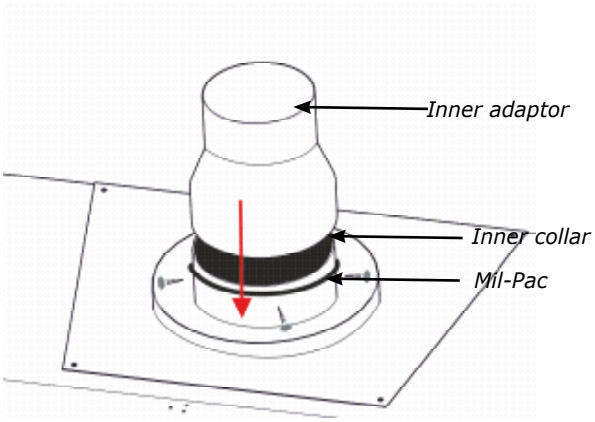

2. Apply a bead of Millpack around the base of the outer vent collar. Slide the outer adaptor over the collar and secure with 3 screws.

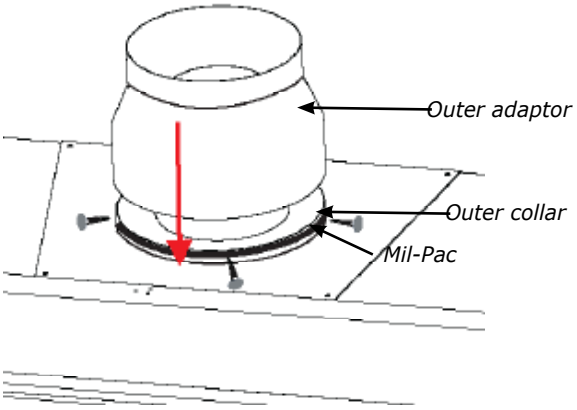

3. Follow installation instructions for the Flex venting kit.

Venting

Direct Vent System (Flex)

HORIZONTAL TERMINATIONS ONLY

These venting systems, in combination with the B36XTE Direct Vent Gas Fireplace, have been tested and listed as a direct vent heater system by Warnock Hersey. The location of the termination cap must conform to the requirements in the Vent Terminal Locations diagram in the "Exterior Vent Termination Locations" section.

Regency Direct Vent (Flex) System Termination Kit (Part # 946-515) includes all the parts needed to install the B36XTE **with a maximum run of 4 feet.**

1	6-7/8" dia. flexible liner (4 ft. length)
2	4" dia. flexible liner (4 ft. length)
3	spring spacers (4)
4	thimble (2)
5	***AstroCap*** termination cap (1)
6	screws (12)
7	tube of Mill Pac (1)
8	plated screws (8)
9	screws #8 x 1-1/2" Drill Point, Stainless Steel (4)

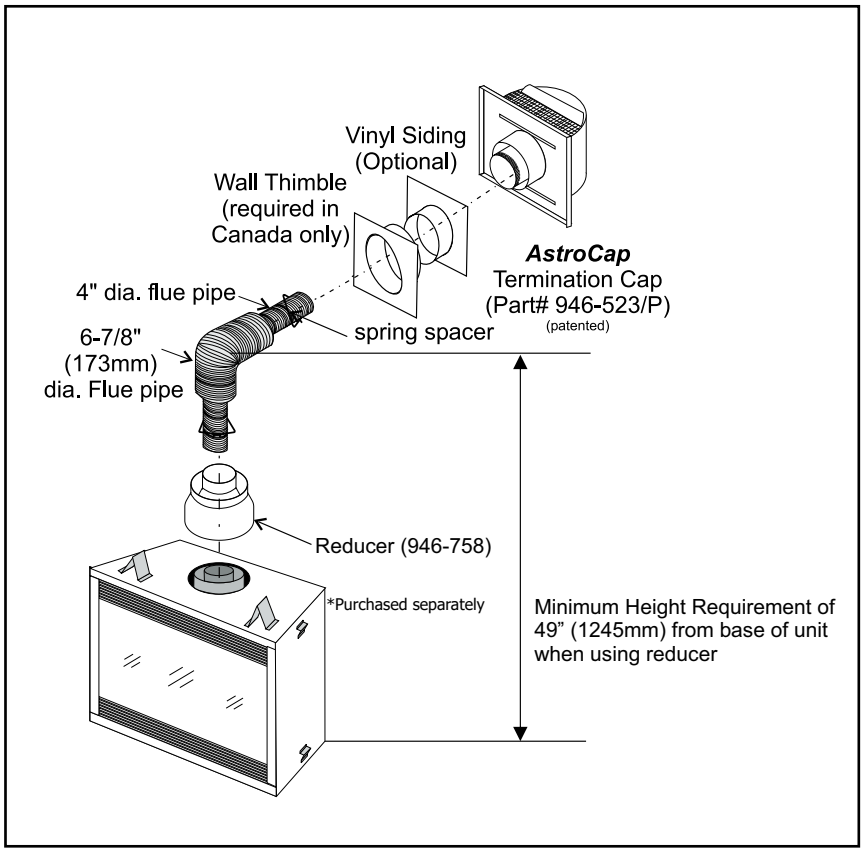

If longer runs are needed, the Regency Direct Vent system (Flex) # 946-516 includes all the parts needed to install the B36XTE with a maximum 10' run.

1	6-7/8" dia. flexible liner (10 ft. length)
2	4" dia. flexible liner (10 ft. length)
3	spring spacers (7)
4	thimble (2)
5	***AstroCap*** termination cap (1)
6	screws (12)
7	tube of Mill Pac (1)
8	plated screws (8)
9	screws #8 x 1-1/2" Drill Point, Stainless Steel (4)

Notes:

1. Liner sections should be continuous without any joints or seams.
2. Only Flex pipe purchased from Regency may be used for Flex installations.

VERTICAL TERMINATION

4" X 6-7/8" VENTING - VERTICAL FLEX VENT KIT (946-755)

1. Maintain the 1-½" (38 mm) clearance (air space) to combustibles when passing through ceilings, walls, floors, enclosures, attic rafters or other nearby combustibles. Do not pack air spaces with insulation. Check Venting sections for the maximum vertical rise of the venting system and the maximum horizontal offset limitations.
   Ensure that you maintain clearances around enclosures, walls, below or above floors, floor joists, etc. Each appliance has different clearance requirements (top,sides,bottom). See specific appliance manual for details.

2. Set the appliance in its desired position. Drop a plumb bob down from the ceiling/floor joist to the position of the appliance flue exit and mark the location where the vent will penetrate the ceiling. Drill a small hole at this point. Next drop a plumb bob from the roof to the hole previously drilled at the ceiling level and mark the spot where the vent will penetrate the roof.

3. Cut a hole in the roof centered on the small hole placed in the roof in the previous steps. The hole should be a minimum of 10-¼ (260 mm) inches. The hole may be round and or square.

4. Slip the flashing under the shingles and line up flashing so it is centered to the hole (shingles should overlap half of the flashing) as per Diagram 1.

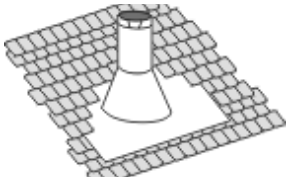

Diagram 1: The upper half of the flashing is installed under the roofing material and not nailed down until the chimney is installed. This allows for small adjustments.

Diagram 1

5. A ceiling firestop/firestop spacer must be installed when passing through each floor or ceiling level. To install the ceiling firestop/firestop spacer in a flat ceiling or floor joist cut a 10- ¼ (260 mm) inch square hole. Frame the hole as show in Diagram 1 and install the ceiling firestop. Slide the top attic insulation spacer onto the top of the attic insulation shield/firestop - See Diagram 1a. Secure with 4 screws/nails. If more than one is required, these can be purchased separately.

Note: The ceiling firestop/firestop spacer may be cut down to size if this shield is too high for the application.

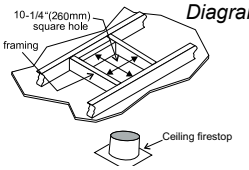

Diagram 2

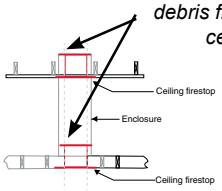

Firestop spacer to prevent debris from falling into the ceiling firestop

Diagram 2a

6. Determine the overall height of the chimney from the top of the appliance to the underside of the flashing. If required cut the flexible inner and outer pipe to the desired length up to a maximum of 20 feet (6.1 m).

7. Put a bead of Mill-Pac around the 4 inch (102 mm) collar on the appliance and slide the inner flex pipe over the inner collar of the appliance and secure with a minimum of 3 screws.

8. Install 4 inch spacers around 4 inch (102 mm) flex.

9. Repeat Step 7 to install the outer pipe to the outer collar of the appliance

Note: If an offset is necessary in the attic or floor joists it is important to support the vent pipe every 3 feet (0.91 m) to avoid excessive stress and sagging of the vent pipe. Wall straps are provided (3 in total) for this purpose. All round/plumbers strapping may also be used if further supports are required.

10. Attach the rigid pipe section to the adaptor by using Mill-Pac on the inner/ outer pipe. Use 3 screws to secure outer pipe.

11. Secure inner flex pipe to pipe adaptor by using Mill-Pac over the adaptor. Slide the inner pipe over adaptor and secure with 3 screws.

12. Repeat Step 11 to secure outer flex.

13. Slide the finished length up towards the flashing ensuring the length of pipe is a minimum of 2 feet (0,61 m) measured from the top of the roof. Level the chimney and secure using the roof support provided with kit to bottom side of the roof as shown using a minimum of 2 screws per side- see Diagram 3b. See Diagram 4 for roof pitch and height requirements. See Diagram 3a for securing method if 2 ft. (0,61 m) is insufficient and additional lengths are required, this may be purchased separately. See Simpson Duravent components list in the instruction manual for part numbers.

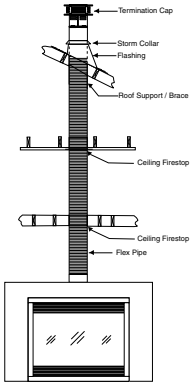

Diagram 3

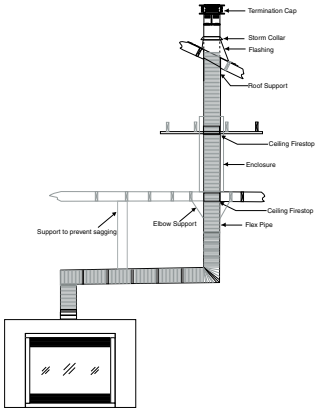

Diagram 3a

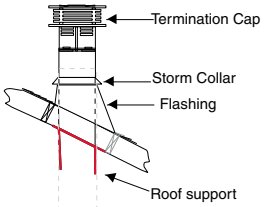

Diagram 3b

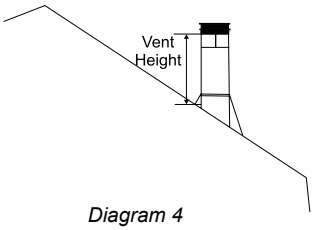

Diagram 4

Roof Pitch	Minimum Vent Height	
	Feet	Meters
flat to 7/12	2	0.61
over 7/12 to 8/12	2	0.61
over 8/12 to 9/12	2	0.61
over 9/12 to 10/12	2.5	0.76
over 10/12 to 11/12	3.25	0.99
over 11/12 to 12/12	4	1.22
over 12/12 to 14/12	5	1.52
over 14/12 to 16/12	6	1.83
over 16/12 to 18/12	7	2.13
over 18/12 to 20/12	7.5	2.29
over 20/12 to 21/12	8	2.44

14. Put a bead of caulking on the exterior between the outer pipe and flashing to prevent water from penetrating the chimney system.

15. Slide storm collar over pipe length until it reaches the flashing.

16. Install termination cap by twist locking it.

17. Secure the flashing to the roof using screws

Note: Any closets or storage spaces which the vent passes through must be enclosed.

Vertical Flue Extension Kit (Part #946-756)

20 foot (6.1 m) Flex pipe Extension
(Used in conjunction with the 946-755 Vertical Flex kit and 948-367/P flex to flex adaptor).

1. Stretch out both inner 4" (102 mm) and outer 6 7/8" (175 mm) pipe up to a maximum of 20 feet.

Note :The inner and outer pipes may be cut if only a short length is required.

2. Install spring spacers around 4" (102 mm) inner pipe as shown. Slide outer flex pipe over and all the way down the 4" pipe.

3. Apply a bead of Mill Pac around the perimeter of the 4" (102 mm) inner collar of the flex adapter and slip the 4" (102 mm) inner flex pipe from the Vertical termination kit over the flex adapter ensuring that the inner flex pipe overlaps the collar by at least 1-3/8" (35 mm). Fasten with 3 screws.

4. Apply a bead of Mill Pac around the perimeter of the 6-7/8" (175 mm) outer collar of the flue adapter and slip it over the 6-7/8" (175 mm) outer flex pipe from the vertical termination kit ensuring that the outer flex pipe overlaps the collar by at least 1-3/8" (35 mm). Fasten with the 3 screws.

5. Repeat steps to secure the other end of the flex adapter using the flex kit.

6. See Vertical Vent installation instructions for installation of the complete vent system.

Note: If an offset is necessary in the attic or floor joists it is important to sup-port the vent pipe every 3 feet (0.91 m) to avoid excessive stress and sagging of the vent pipe. Wall straps are provided (3 in total) for this purpose.

All round/plumbers strapping may also be used if further supports are required.

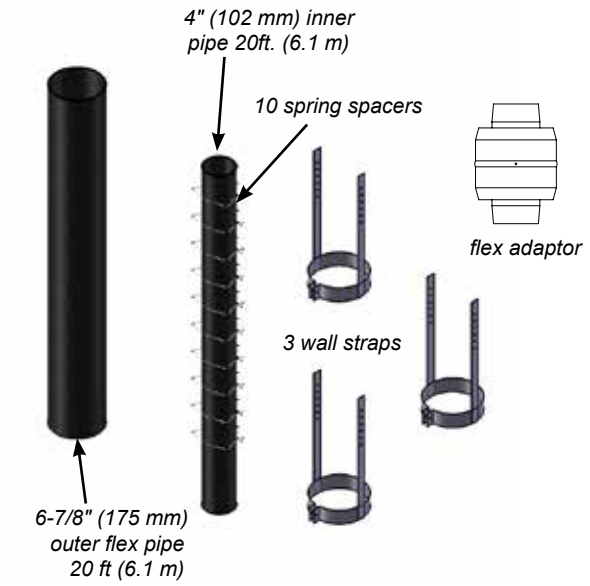

Ceiling Firestop / Firestop Spacer (Part #946-757)

Used in conjunction with the 946-755 Vertical Flex Kit and the 946-756 Vertical Flex Extension Kit/Horizontal Power Vent Kit.

A ceiling firestop/firestop spacer must be installed when passing through each floor or ceiling level. To install the ceiling firestop/firestop spacer in a flat ceiling or floor joist, cut a 10- ¼ inch square hole, frame it as show in Diagram 1, and install the ceiling firestop. Slide the top attic insulation spacer onto the top of the attic insulation shield/firestop (see Diagram 1a). Secure with 4 screws/nails. If more than one firestop is required, these can be purchased separately.

NOTE	• The ceiling firestop/firestop spacer may be cut down to size if the shield is too high for the application.

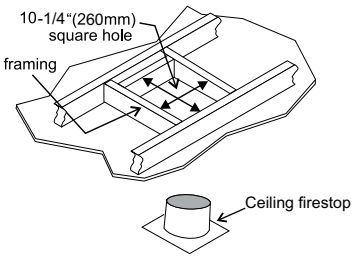

Diagram 1

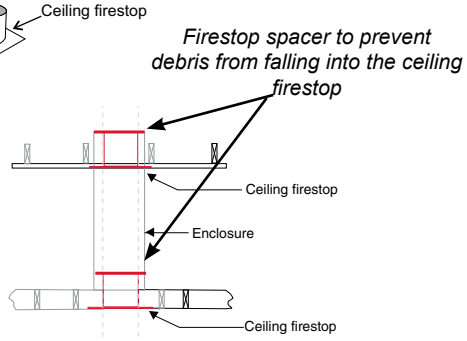

Diagram 1a

4" x 6-5/8" Rigid Pipe Cross Reference Chart Only

Components from different Manufacturers may not be mixed. Not all Rigid Pipe components are available directly from FPI.

Description	Simpson Direct Vent Pro®	*Selkirk Direct Temp™	*American Metal Products® Amerivent Direct	*Metal-Fab™ Sure Seal	*Security Secure- Vent®	*ICC Excel Direct	*Olympia Ventis DV*
6" Pipe Length-Galvanized	46DVA-06	4DT-06	N/A	4D6	SV4L6	TC-4DL6	VDV-0406
6" Pipe Length-Black	46DVA-06B	4DT-06B	N/A	4D6B	SV4LB6	TC-4DL6B	VDVB-0406
7" Pipe Length-Galvanized	N/A	N/A	4D7	N/A	N/A	N/A	N/A
7" Pipe Length-Black	N/A	N/A	4D7B	N/A	N/A	N/A	N/A
9" Pipe Length-Galvanized	46DVA-09	4DT-09	N/A	N/A	N/A	TC-4DL9	VDV-0409
9" Pipe Length-Black	46DVA-09B	4DT-09B	N/A	N/A	N/A	TC-4DL9B	VDVB-0409
12" Pipe Length-Galvanized	46DVA-12	4DT-12	4D12	4D12	SV4L12	TC-4DL1	VDV-0412
12" Pipe Length-Black	46DVA-12B	4DT-12B	4D12B	4D12B	SV4LB12	TC-4DL1B	VDVB-0412
18" Pipe Length-Galvanized	46DVA-18	4DT-18	4D18	4D18	SV4LA	TC-4DL18	VDV-0418
18" Pipe Length-Black	46DVA-18B	4DT-18B	4D18B	4D18B	SV4LA	TC-4DL18B	VDVB-0418
24" Pipe Length-Galvanized	46DVA-24	4DT-24	4D24	4D24	SV4L24	TC-4DL2	VDV-0424
24" Pipe Length-Black	46DVA-24B	4DT-24B	4D24B	4D24B	SV4LB24	TC-4DL2B	VDVB-0424
36" Pipe Length-Galvanized	46DVA-36	4DT-36	4D36	4D36	SV4L36	TC-4DL3	VDV-0436
36" Pipe Length-Black	46DVA-36B	4DT-36B	4D36B	4D36B	SV4LB36	TC-4DL3B	VDVCB-0436
48" Pipe Length-Galvanized	46DVA-48	4DT-48	4D48	4D48	SV4L48	TC-4DL4	VDV-0448
48" Pipe Length-Black	46DVA-48B	4DT-48B	4D48B	4D48B	SV4LB48	TC-4DL4B	VDVB-0448
60" Pipe Length-Galvanized	46DVA-60	4DT-60	N/A	N/A	N/A	N/A	N/A
60" Pipe Length-Black	46DVA-60B	4DT-60B	N/A	N/A	N/A	N/A	N/A
Adjustable Length 3"-10"-Galvanized	N/A	N/A	N/A	4DAL	N/A	TC-4DLT	N/A
Adjustable Length 3"-10"-Black	N/A	N/A	N/A	4DALB	N/A	TC-4DLTB	N/A
Adjustable Length 7"-Galvanized	N/A	N/A	4D7A	N/A	N/A	N/A	N/A
Adjustable Length 7"-Black	N/A	N/A	4D7AB	N/A	N/A	N/A	N/A
Extension Pipe 8-1/2"-Galvanized	46DVA-08A	N/A	N/A	N/A	N/A	N/A	N/A
Extension Pipe 8-1/2"-Black	46DVA-08AB	N/A	N/A	N/A	N/A	N/A	N/A
Adjustable Length 12"-Galvanized	N/A	N/A	4D12A	N/A	SV4LA12	TC-4dLSI	N/A
Adjustable Length 12"-Black	N/A	N/A	4D12A	N/A	SV4LBA12	TC-4dLSIB	N/A
Extension Pipe 16"-Galvanized	46DVA-16A	N/A	N/A	N/A	N/A	N/A	N/A
Extension Pipe 16"-Black	46DVA-16AB	N/A	N/A	N/A	N/A	N/A	N/A
45º Elbow-Galvanized	46DVA-E45	4DT-EL45	4D45L	N/A	N/A	TE-4DE45	VDV-EL0445
45º Elbow-Black	46DVA-E45B	4DT-EL45B	4DT-EL45B	N/A	N/A	TE-4DE45B	VDVB-EL0445
45º Elbow Swivel-Galvanized	See 46DVA-E45	N/A	N/A	4D45L	SV4E45	N/A	N/A
45º Elbow Swivel-Black	See 46DVA-E45B	N/A	N/A	4D45LB	SV4EB45	N/A	N/A
90º Elbow-Galvanized	46DVA-E90	4DT-EL90S	4DT-EL90S	N/A	N/A	TE-4DE90	VDV-EL0445
90º Elbow-Black	46DVA-E90B	4DT-EL90SB	4DT-EL90SB	N/A	SV4EBR90-1	TE-4DE90B	VDVB-EL0445
90º Elbow, Swivel-Galvanized	See 46DVA-E90	N/A	N/A	4D90L	SV4E90-1	N/A	N/A
90º Elbow, Swivel-Black	See 46DVA-E90B	N/A	N/A	4D90LB	SV4EB90-1	N/A	N/A
90º Starter Elbow, Swivel-Galvanized	N/A	N/A	N/A	4D90A	N/A	N/A	N/A
Adaptor*	N/A	N/A	N/A	4D90L	N/A	N/A	VDV-UAA04
Ceiling Support	N/A	4DT-CS	4DSP	4DFSP	SV4SD	TM4-RDS	VDV-SCR04
Cathedral Support Box	46DVA-CS	4DT-CSS	4DRSB	4DRS	SV4CSB	TM4-SDS	VDV-CSS04
Wall Support/Band	46DVA-WS	4DT-WS/B	4DWS	4DWS	SV4BM	TM-SWS	VDV-WS04
Offset Support	46DVA-ES*	4DT-OS	N/A	N/A	SV4SU	TM-SOS	N/A
Wall Thimble	46DVA-WT	4DT-WT	4DWT	4DWT	SV4RSM	N/A	VDV-WPT04
Wall Thimble Cover/Ceiling Support	46DVA-DC	N/A	N/A	N/A	SV4PF	N/A	N/A
Firestop Spacer	46DVA-FS	4DT-FS	4DFSP	4DFS	SV4BF	TM-4CS	VDV-FS04
Trim Plate-Black	N/A	4DT-TPS	4DFPB	4DcP	SV4LA	TM-4TP	VDV-WTC04

* Not available from Regency

Description	Simpson Direct Vent Pro®	*Selkirk Direct Temp™	*American Metal Products® Amerivent Direct	*Metal-Fab™ Sure Seal	*Security Secure- Vent®	*ICC Excel Direct	*Olympia Ventis DV*
Attic Insulation Shield 12"	46DVA-IS	N/A	4DAIS12	DDIS	SV4RSA	N/A	VDV-AIS04
Attic Insulation Shield - Cold Climates 36"	N/A	N/A	4DAIS12	N/A	N/A	TM-4AS	N/A
Basic Horizontal Termination Kit (A)	4DVA-KHA	4DT-HKA	4DHTK2	4DHTKA	SV-SHK	TM4-HTK	VDV-KW04
Horizontal Termination Kit (B)	N/A	4DT-HKB	4DHTK1	4DHTKB	SV-HK	TM4-HTK	VDV-K04
Vertical Termination Kit	N/A	4DT-VKC	4DHTK	4DHTK	SV-FK	N/A	N/A
High Wind Vertical Cap	46DVA-VCH	4DT-VC	N/A	N/A	N/A	TM-4VT	VDV-VCHW04
High Wind Horizontal Cap	N/A	N/A	N/A	N/A	N/A	TM-4DHT	N/A
Horizontal Square Termination Cap	46DVA-HC	4DT-AHC	4DHC	4DHT	SV4CHC	TM-4HT	VDV-HC04
Vertical Termination Cap	46DVA-VC	4DT-HVC	4DVC	4DVT	SV4CGV	N/A	N/A
Storm Collar	46DVA-SC	4DT-SC	4DSC	4DSC	SV4FC	TM-SC	VDV-SC04
Flashing - Flat Roof	46DVA-FF	N/A	N/A	N/A	N/A	N/A	N/A
Adjustable Flashing 0/12-6/12	46DVA-F6	4DT-AF6	4D12S	4DF	SV4STC14	TF-4FA	VDV-F0406
Adjustable Flashing 6/12-12/12	46DVA-F12	4DT-AF12	4D36S	4DF12	SV4STC36	TF-4FB	VDV-SSO
Vinyl Siding Standoff	46DVA-VSS	4DT-VS-1	N/A	4DVS	SV4VS	TM-VSS	N/A
Vinyl Siding Shield Plate	N/A	4DT-VSP	N/A	N/A	SV4VS	N/A	N/A
Snorkel Termination 14″	46DVA-SNK14	4DT-AF14	N/A	N/A	N/A	TM-4ST14	N/A
Snorkel Termination 36″	46DVA-SNK36*	4DT-ST36	N/A	N/A	N/A	TM-4ST36	N/A
Wall Firestop	46DVA-FS*	N/A	N/A	N/A	N/A	TM-4TR	VDV-FS04

* Not available from Regency

946-506/P	Vent Guard (Optional) for AstroCap	946-205	Vinyl Siding Shield for Riser Vent Terminal
**770-994	Rigid Pipe Adaptor (Must use with all rigid piping)*	946-208/P	Vent Guard (Optional) for Riser Vent Terminal
640-530/P	Riser Vent Terminal	946-523/P	AstroCap Horizontal Cap
946-606	Starter Collar Reducer 5-8 to 4-6 5/8 (Must use with all rigid piping)*	946-206	Vinyl Siding Standoff for AstroCap

*Must purchase both when using rigid venting.

NOTE: When using Metal-Fab Sure Seal Rigid Piping - please note that the Adaptor (4DDA) must ne used in conjunction with FPI Rigid Pipe Adaptor (770-994)

Offset Pipe Selection: Use this table to determine offset pipe lengths.

Pipe Length (L)	4″ x 6-5/8″ Venting	
	Run (X)	Rise (Y)
0″ (0mm)	4-7/8″ (124mm)	13-7/8″ (340mm)
6″ (152mm)	8″ (203mm)	16-1/2″ (419mm)
9″ (229mm)	10-1/8″ (257mm)	18-5/8″ (473mm)
12″ (305mm)	12-1/4″ (311mm)	20-3/4″ (527mm)
24″ (610mm)	20-5/8″ (524mm)	29-1/8″ (740mm)
36″ (914mm)	29″ (737mm)	37-1/2″ (953mm)
48″ (1219mm)	37-7/16″ (951mm)	45-15/16″ (1167mm)

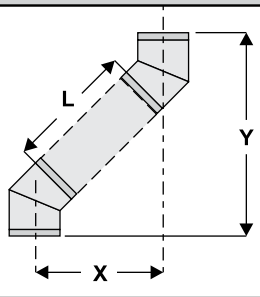

For specific instructions on venting components - visit the manufacturers website listed below.

- Simpson Direct Vent Pro: www.duravent.com
- Selkirk Direct-Temp: www.selkirkcorp.com
- American Metal Products: www.americanmetalproducts.com
- Metal-Fab Sure Seal: www.mtlfab.com
- Security Secure Vent: www.securitychimneys.com
- Industrial Chimney Company: www.icc-rsf.com
- Olympia Ventis DV: www.olympiachimney.com

Note: Horizontal runs of vent must be level, or have a 1/4″ rise for every 1 foot of run towards the termination.
Never allow the vent to run downward - this could cause high temperatures and may present a possible fire hazard.

5" x 8" Rigid Pipe Cross Reference Chart Only

Components from different Manufacturers may not be mixed. Not all Rigid Pipe components are available directly from FPI.

Description	Simpson Direct Vent Pro®	*Selkirk Direct Temp™	*Metal-Fab™ Sure Seal	*ICC Excel Direct	*Olympia Ventis DV***
6" Pipe Length-Galvanized	58DVA-06	5DT-06	5D6	TC-5DL6	VDV-0506
6" Pipe Length-Black	58DVA-06B	5DT-06B	5D6B	TC-5DL6B	VDVB-0506
9" Pipe Length-Galvanized	58DVA-09	5DT-09	N/A	TC-5DL9	VDV-0509
9" Pipe Length-Black	58DVA-09B	5DT-09B	N/A	TC-5DL9B	VDVB-0509
12" Pipe Length-Galvanized	58DVA-12	5DT-12	5D12	TC-5DL1	VDV-0512
12" Pipe Length-Black	58DVA-12B	5DT-12B	5D12B	TC-5DL1B	VDVB-0512
18" Pipe Length-Galvanized	58DVA-18	5DT-18	5D18	TC-5DL18	VDV-0518
18" Pipe Length-Black	58DVA-18B *	5DT-18B	5D18B	TC-5DL18B	VDVB-0518
24" Pipe Length-Galvanized	58DVA-24	5DT-24	5D24	TC-5DL2	VDV-0524
24" Pipe Length-Black	58DVA-24B	5DT-24B	5D24B	TC-4DL2B	VDVB-0524
36" Pipe Length-Galvanized	58DVA-36	5DT-36	5D36	TC-5DL3	VDV-0536
36" Pipe Length-Black	58DVA-36B	5DT-36B	5D36B	TC-5DL3B	VDVB-0536
48" Pipe Length-Galvanized	58DVA-48	5DT-48	5D48	TC-5DL4	N/A
48" Pipe Length-Black	58DVA-48B	5DT-48B	5D48B	TC-5DL4B	N/A
60" Pipe Length-Galvanized	58DVA-60	N/A	N/A	N/A	N/A
60" Pipe Length-Black	58DVA-60B *	N/A	N/A	N/A	N/A
Adjustable Length 3"-10"-Galvanized	N/A	N/A	5DAL	TC-5DLT	N/A
Adjustable Length 3"-10"-Black	N/A	N/A	5DALB	TC-5DLTB	N/A
Adjustable Length 11"-14" -Galvanized	Disc. - See 58DV-08A	5DT-AJ	N/A	N/A	N/A
Adjustable Length 11"-14" -Black	Disc. - See 58DV-08B	5DT-AJB	N/A	N/A	N/A
Extension Pipe 17"-24" -Galvanized	Disc. - See 58DV-16A	N/A	N/A	N/A	N/A
Extension Pipe 17"-24" -Black	Disc. - See 58DV-16AB	N/A	N/A	N/A	N/A
Adjustable Length 8-1/2"-Galvanized	58DVA-08A	N/A	N/A	N/A	N/A
Adjustable Length 8-1/2"-Black	58DVA-08AB	N/A	N/A	N/A	N/A
Extension Pipe 16"-Galvanized	58DVA-16A	N/A	N/A	N/A	N/A
45° Elbow-Galvanized	58DVA-E45	5DT-EL45	5DT-EL45	TE-5DE45	VDV-EL0545
45° Elbow-Black	58DVA-E45B	5DT-EL45B	5DT-EL45B	TE-5DE45B	VDVB-EL0545
45° Elbow Swivel-Galvanized	Disc. - See 58DVA-E45	N/A	N/A	N/A	N/A
45° Elbow Swivel-Black	Disc.-See 58DVA-E45B	N/A	N/A	N/A	N/A
90° Elbow-Galvanized	58DVA-E90	5DT-EL90S	5DT-EL90S	TE-5DE90	VDV-EL0590
90° Elbow-Black	58DVA-E90B	5DT-EL90SB	5DT-EL90SB	TE-5DE90B	VDV-EL0590
90° Elbow, Swivel-Galvanized	Disc. - See 46DVA-E45	N/A	N/A	N/A	N/A
90° Elbow, Swivel-Black	Disc. - See 46DVA-E45	N/A	N/A	N/A	N/A
90° Starter Elbow, Swivel-Galvanized	N/A	N/A	N/A	N/A	N/A
Adaptor*	N/A	N/A	N/A	N/A	VDV-UAA05
Ceiling Support	58DVA-DC	5DT-CS	5DSP	TM-5RDS	VDV-CSR05
Cathedral Support Box	58DVA-CS	5DT-CSS	5DRS	TM-5SS	DV-CSS05
Wall Support/Band	58DVA-WS	5DT-WS/B	5DWS	TM-5WS	VDV-WS05
Offset Support	58DVA-ES*	5DT-OS	N/A	TM-5OS	N/A
Wall Thimble	58DVA-WT	5DT-WT	5DWT	N/A	VDV-WPT05
Wall Thimble Support/Ceiling Support	58DVA-DC*	N/A	N/A	N/A	N/A
Firestop Spacer	58DVA-FS	5DT-FS	5DFS	TM-5LS	VDV-FS05
Trim Plate-Black	58DVA-WFS	5DT-TPS	5DCP	TM-5TP	VDV-WTC05

* Not available from Regency

Description	Simpson Direct Vent Pro®	*Selkirk Direct Temp™	*Metal-Fab™ Sure Seal	*ICC Excel Direct	*Olympia Ventis DV***
Attic Insulation Shield 12"	58DVA-IS	N/A	N/A	N/A	VDV-AIS05
Basic Horizontal Termination Kit (A)	N/A	5DT-HKA	N/A	TM-5HTK	VDV-KW05
Horizontal Termination Kit (B)	N/A	5DT-HKB	N/A	TM-5HTK	VDV-K05
Vertical Termination Kit	N/A	5DT-VKC	N/A	N/A	N/A
High Wind Vertical Cap	58DVA-VCH	N/A	N/A	TM-5VT	VDV-VCH05
High Wind Horizontal Cap	N/A	N/A	N/A	TM-5DHT	N/A
Horizontal Square Termination Cap	58DVA-HC	5DT-AHC	5DHT	TM-5HT	VDV-HC05
Vertical Termination Cap	N/A	5DT-HVC	5DVT	N/A	N/A
Storm Collar	58DVA-SC	5DT-SC	5DSC	TM-SC	VDV-SC05
Adjustable Flashing 0/12-6/12	58DVA-F6	5DT-AF6	5DF	TF-5FA	VDV-F0506
Adjustable Flashing 6/12-12/12	58DVA-F12	5DT-AF12	5DF1-2	TF-5FB	VDV-F0512
Vinyl Siding Standoff	58DVA-VSS	5DT-VS-1	5DVS	TM-VSS	VDV-SSO
Vinyl Siding Shield Plate	N/A	5DT-VSP	N/A	N/A	N/A
Snorkel Termination 14"	58DVA-SNK14	N/A	N/A	TM-5ST14	N/A
Snorkel Termination 36"	58DVA-SNK36*	N/A	N/A	TM-5ST36	N/A
Restrictor Disk	N/A	N/A	N/A	N/A	N/A
Colinear Flex Connectors	N/A	N/A	N/A	N/A	N/A

* Not available from Regency

FPI			
946-604/P	Simpson Direct Vent or Astro Cap -Vent Guard (Optional)	946-623/P	AstroCap XL Horizontal Cap
770-994	Rigid Pipe Adaptor (Must use with all rigid piping)	946-625	Vinyl Siding Standoff - AstroCap XL

Note: When using Metal-Fab Sure Seal Rigid Piping - please note that the Adaptor (5DDA) must be used in conjunction with FPI Rigid Pipe Adaptor (770-994).

Offset Pipe Selection: Use this table to determine offset pipe lengths.

Pipe Length (L)	5" x 8" Venting	
	Run (X)	Rise (Y)
0" (0mm)	5-11/16" (144mm)	15-5/16" (389mm)
6" (152mm)	8-13/16" (224mm)	18-7/16" (468mm)
9" (229mm)	10-15/16" (278mm)	20-9/16" (522mm)
12" (305mm)	13" (330mm)	22-11/16" (576mm)
24" (610mm)	21-7/16" (697mm)	31-1/16" (789mm)
36" (914mm)	29-13/16" (757mm)	39-7/16" (1002mm)
48" (1219mm)	38-1/4" (972mm)	47-7/8" (1216mm)

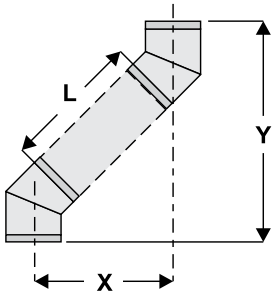

For specific instructions on venting components - visit the manufacturers website listed below.

Simpson Direct Vent Pro: www.duravent.com

Selkirk Direct-Temp: www.selkirkcorp.com

Metal-Fab Sure Seal: www.mtlfab.com

Industrial Chimney Company: www.icc-rsf.com

Olympia Ventis DV: www.olympiachimney.com

Note: Horizontal runs of vent must be level, or have a 1/4" rise for every 1 foot of run towards the termination. Never allow the vent to run downward - this could cause high temperatures and may present a possible fire hazard.

Horizontal Terminations
AstroCap XL & Rigid Rear Vent Kit for Corner Installations
Rigid Pipe 5" x 8" - when using Vignette Finishing Trim (see next page)

Designed for a minimum vent configuration when using a rear vent application with a horizontal termination in a corner installation.

Kit 946-612 Includes		
1	AstroCap XL	946-623/P
1	Rigid Pipe Adaptor	770-994
1	Vinyl Siding Standoff (Optional)	946-625
1	Wall Thimble	58DVA-WT
1	6" galvanized rigid pipe	58DVA-06
1	8-1/2" galvanized pipe extension	58DVA-08A
1	45º galvanized elbow	58DVA-E45
1	90 ml MillPac	948-128

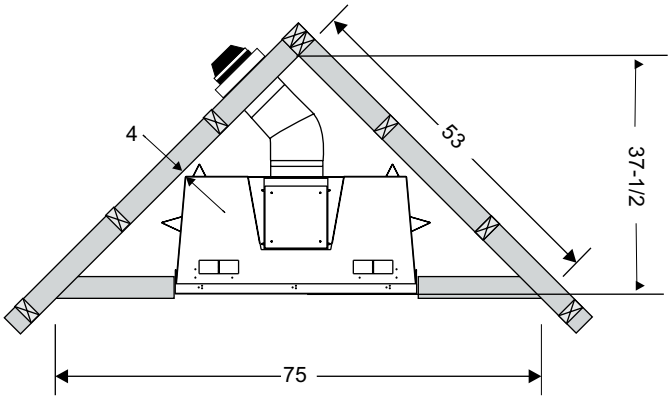

Placement of the unit into the corner	
Back top corner of unit to wall	4"
Inside corner out along the wall	53"
Across the face of the unit, wall to wall	75"
Inside corner to front face of the unit	37-1/2"

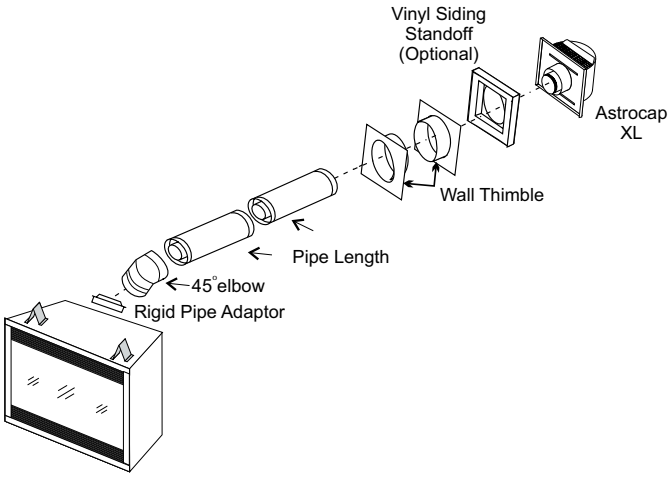

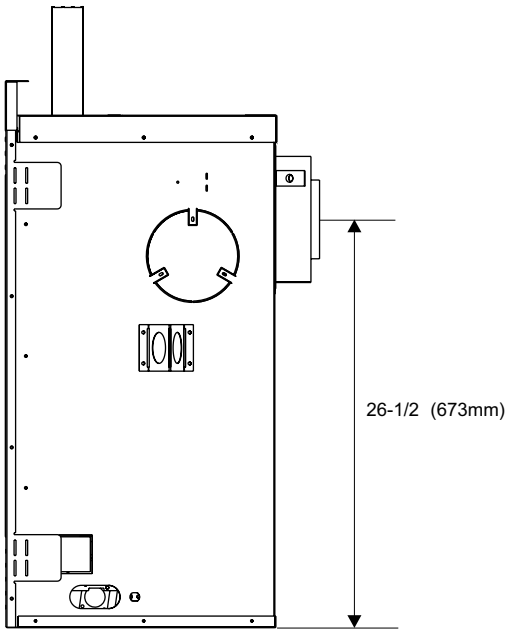

Horizontal 5” x 8” Rigid Rear Vent Kit
AstroCap XL & Rigid Rear Vent Kit for Corner Installations
Rigid Pipe 5" x 8" - when Installed with Vignette and Vignette Finishing Trim - Finished Flush

Designed for a minimum vent configuration when using a rear vent application with a horizontal termination in a corner installation.

Kit 946-612 Includes		
1	AstroCap XL	946-623/P
1	Rigid Pipe Adaptor	770-994
1	Vinyl Siding Standoff (Optional)	946-625
1	Wall Thimble	58DVA-WT
1	6" galvanized rigid pipe	58DVA-06
1	8-1/2" galvanized pipe extension	58DVA-08A
1	45º galvanized elbow	58DVA-E45
1	90 ml Mill Pac	948-128

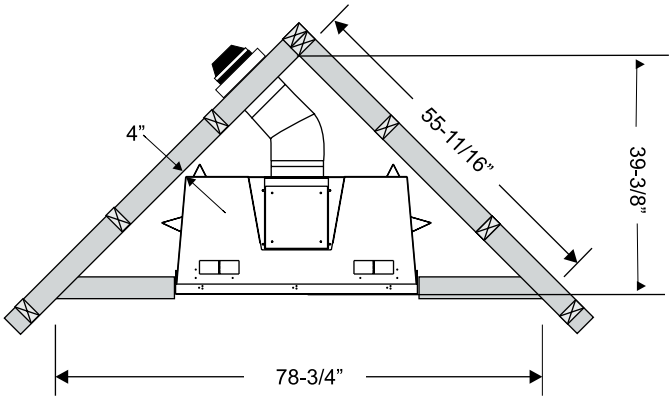

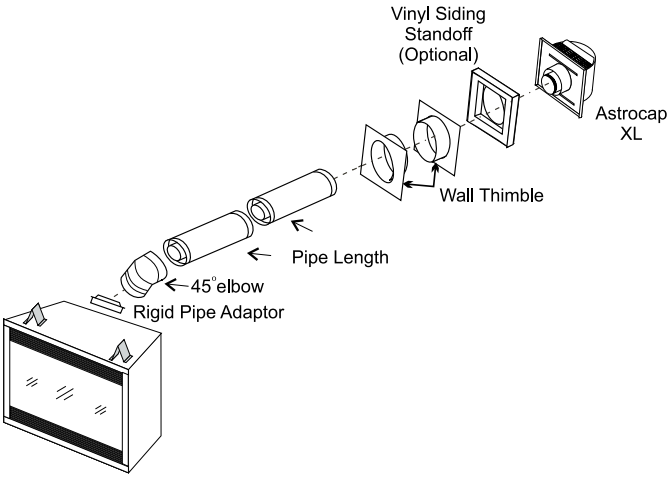

Placement of the unit into the corner	
Back top corner of unit to wall	4"
Inside corner out along the wall	55-11/16"
Across the face of the unit, wall to wall	78-3/4"
Inside corner to front face of the unit	39-3/8"

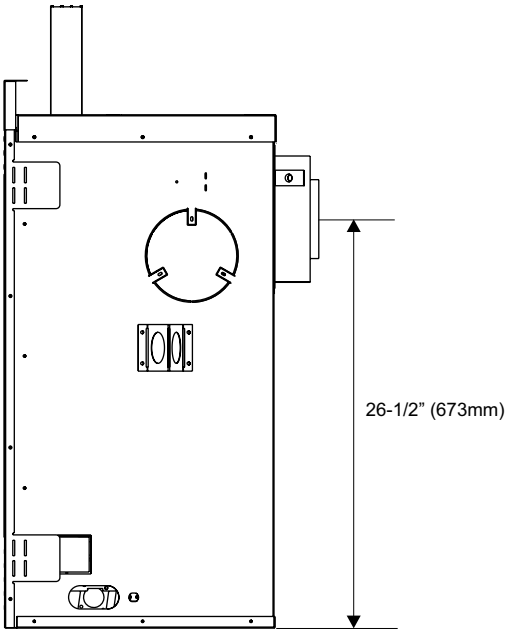

Venting Arrangements for horizontal terminations
Flex Vent or rigid pipe 5" x 8"

The Diagrams show all allowable combinations of vent runs with 5" x 8" venting using the Regency direct vent system or rigid vent system.
A vent guard should be used whenever the termination is lower than the specified minimum or as per local codes.

For horizontal terminations the Regency Direct Vent Flex System may be used for installations with a maximum **continuous** vent maximum horizontal length of 3ft (0.9m).

Note: Must use optional rigid pipe adaptor (Part # 770-994) when using Rigid Pipe vent systems.

- **Maintain clearance to combustibles.**
- **Horizontal vent must be supported every 3 feet.**
- **Firestops are required at each floor level and whenever passing through a wall.**

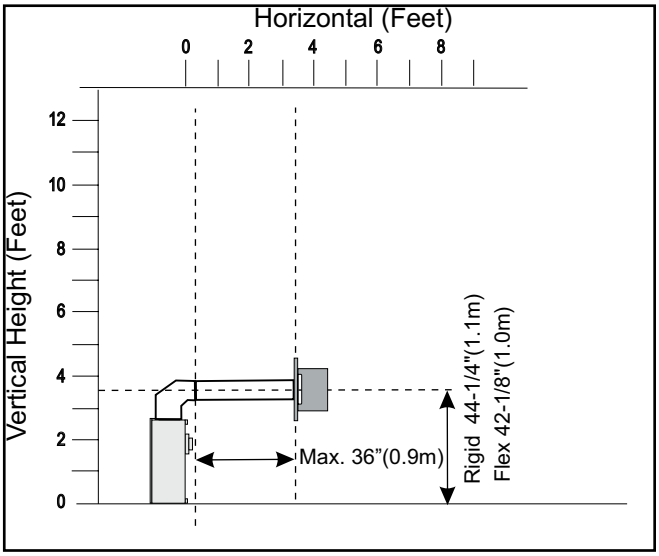

Factory Setting - No Restrictor Required

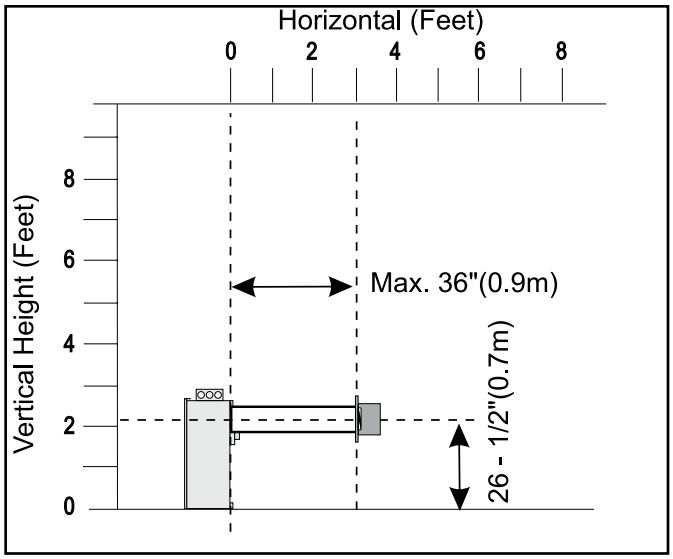

Factory Setting - No Restrictor Required

Horizontal Terminations

Flex Vent 5" x 8"

These venting systems, in combination with the B36XTE Direct Vent Gas Fireplace, has been tested and listed as a direct vent heater system by Intertek. The location of the termination cap must conform to the requirements in the Vent Terminal Locations Diagram in "Exterior Vent Termination Locations" section.

Regency® Direct Vent (Flex) System 4 foot Termination Kit (Part# 946-615) includes all the parts needed to install the B36XTE with a either a top or rear vent.

Note: If top venting this unit, the 5" x 8" venting may only be used if venting to the minimum of 42-1/8" to centerline.
No other application is approved.

FPI Kit #	Length	Contains:
#946-615	4 Feet	1) 8" flexible liner (Kit length) 2) 5" flexible liner (Kit length) 3) spring spacers 4) thimble 5) ***AstroCap*** termination cap 6) screws 7) tube of Mill Pac 8) plated screws 9) S.S. screws #8 x 1-1/2" drill point 10) vinyl siding standoff

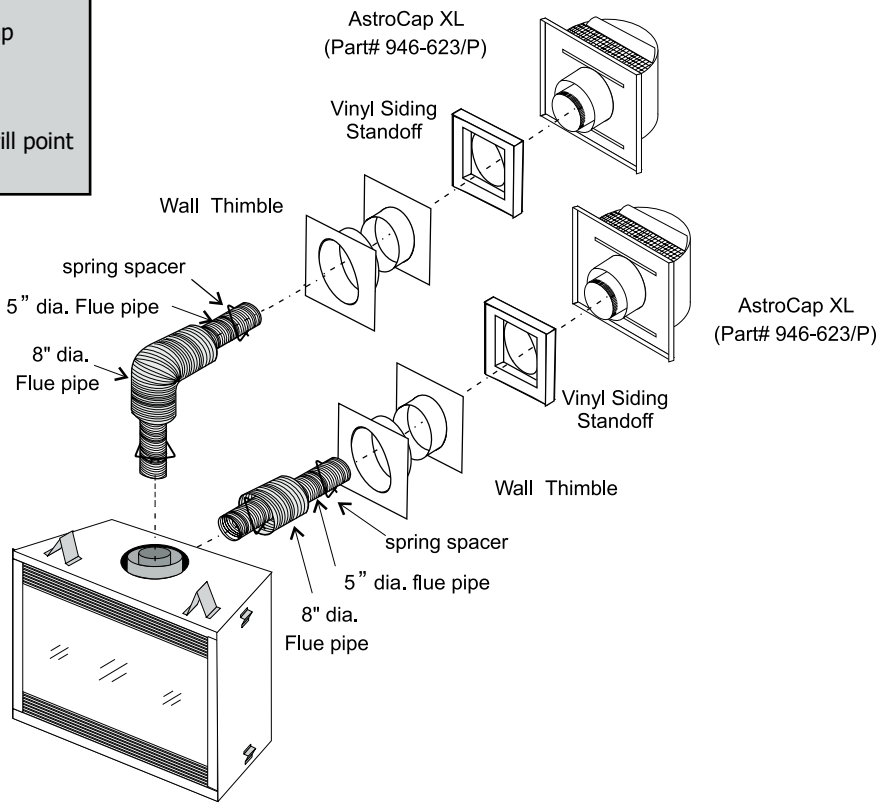

1. 8" dia. flexible liner (4 ft. length)
2. 5" dia. flexible liner (4 ft. length)
3. spring spacers (4)
4. thimble
5. AstroCapXL termination cap (1)
6. screws (12)
7. tube of Mill Pac (1)
8. plated screws (8)
9. screws #8 x 1-1/2" Drill Point, Stainless Steel (4)
10. vinyl siding standoff

Notes:

1. Liner sections should be continuous without any joints or seams.
2. Only Flex pipe purchased from Regency may be used for Flex installations.
3. Regency® Direct Vent System (Flex) is only approved for horizontal terminations.

Horizontal Terminations
Rigid Pipe 5"x 8"

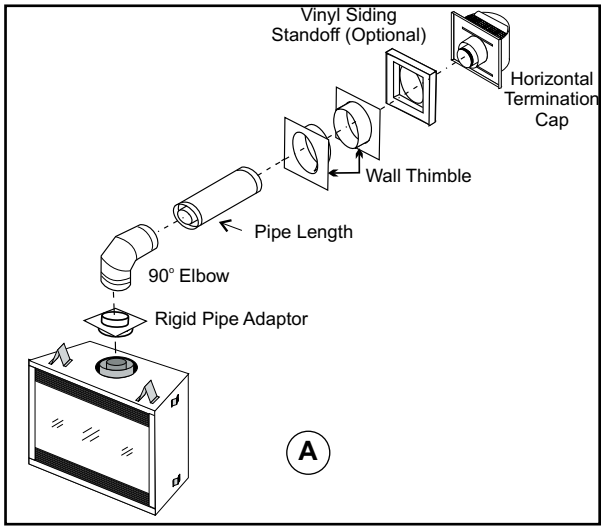

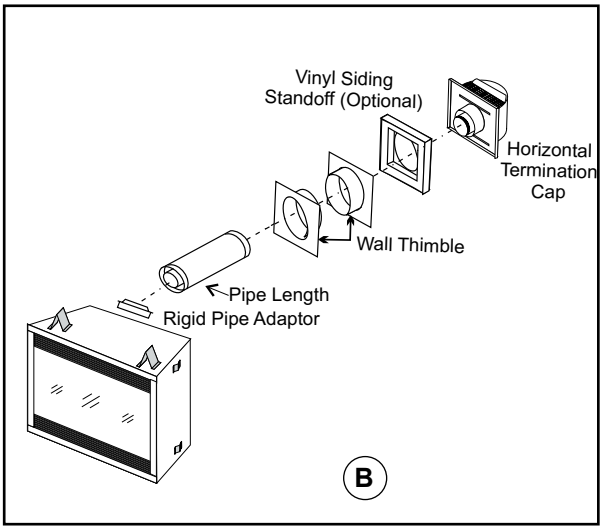

Horizontal Termination	
A	**Top Vent - No Vertical Rise** • When venting with a 90° elbow directly off the unit, must use 5" X 8" AstroCapXL™ Flex vent or approved Rigid Vent System • Max. 3 ft. horizontal run
B	**Rear Vent w/ Horizontal Termination** • Can only use 5" x 8" venting • Max. 3ft. horizontal run

Venting Arrangements for Horizontal Terminations

Rigid/Flex Pipe 4" x 6-5/8"

Rigid Pipe - Must use Reducer Part # 946-606 & 770-994 Rigid Pipe Adaptor
Flex Pipe - Must use reducer part #946-758

The diagram shows all allowable combinations of vertical runs with horizontal terminations, using one 90° two 45° elbows equal one 90° elbow).

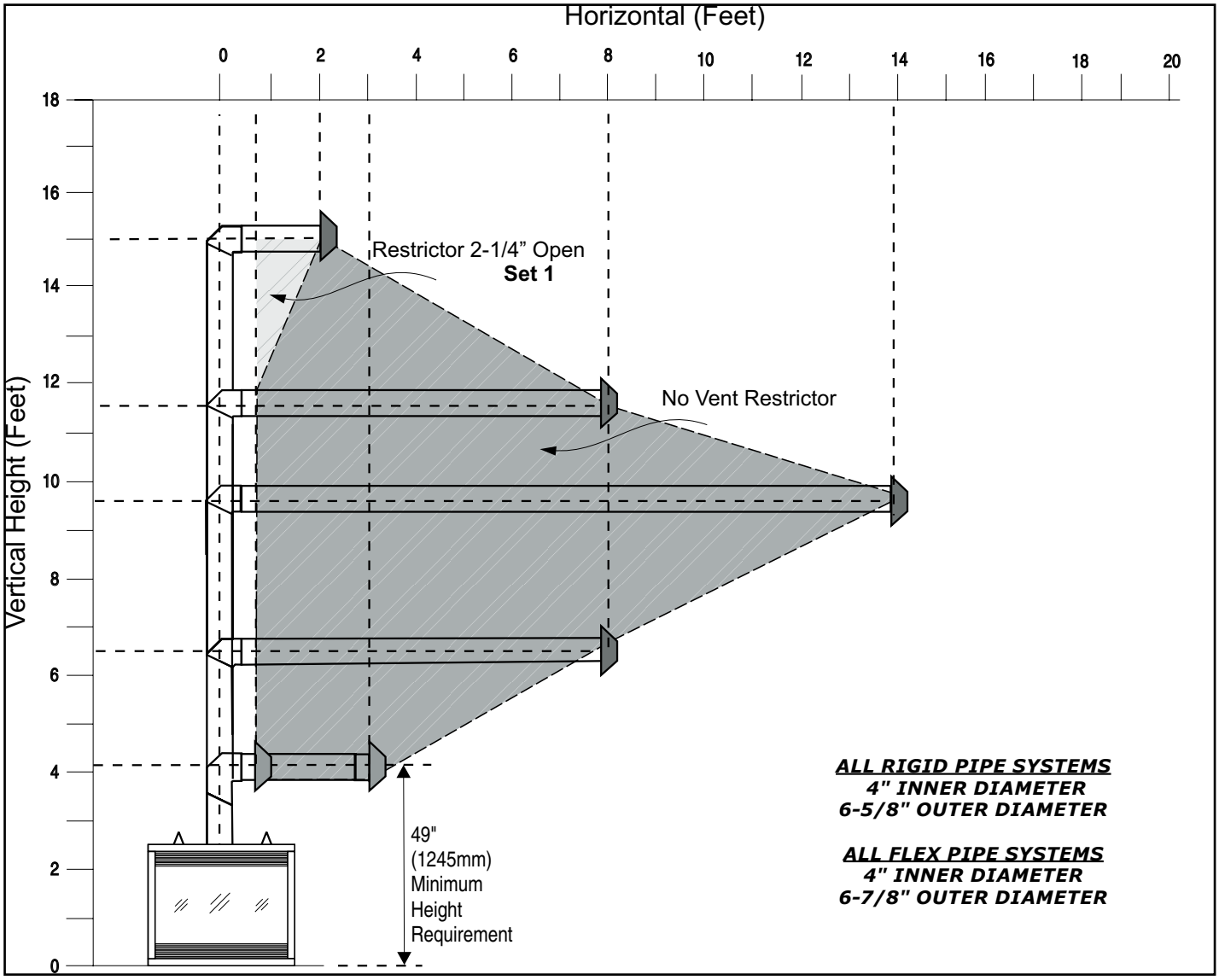

- **Maintain clearances to combustibles as listed in "Clearances" section**
- **Horizontal vent must be supported every 3 feet.**
- **Firestops are required at each floor level and whenever passing through a wall.**
- **A wall thimble is mandatory for all horizontal terminations due to high temperatures.**

NOTE: FOR HORIZONTAL TERMINATIONS THE REGENCY DIRECT VENT FLEX SYSTEM MAY BE USED FOR INSTALLATIONS WITH A MAXIMUM CONTINUOUS VENT LENGTH OF UP TO 10 FEET. IF LONGER RUNS ARE REQUIRED, RIGID PIPE MUST BE USED.

Horizontal or Vertical Terminations

Rigid Pipe 4" x 6-5/8"

(must use Reducer Part # 946-606 & 770-994 Rigid Pipe Adaptor)

The minimum components required for a basic horizontal termination using 4" x 6-5/8" are:

1 Rigid Pipe Adaptor (770-994)
1 Reducer (946-606)
1 90° Elbow
1 Wall Thimble
1 Length of pipe to suit wall thickness
1 Horizontal Termination Cap

Wall thickness is measured from the back standoffs to the inside mounting surface of termination cap. For siding other than vinyl furring strips may be used, instead of the vinyl siding standoff, to create a level surface to mount the vent terminal. The Terminal must not be recessed into siding. Measure the wall thickness including furring strips.

If a Vinyl Siding Standoff is required (it must be used with vinyl siding), measure to outside surface of wall without siding and add 2 inches.

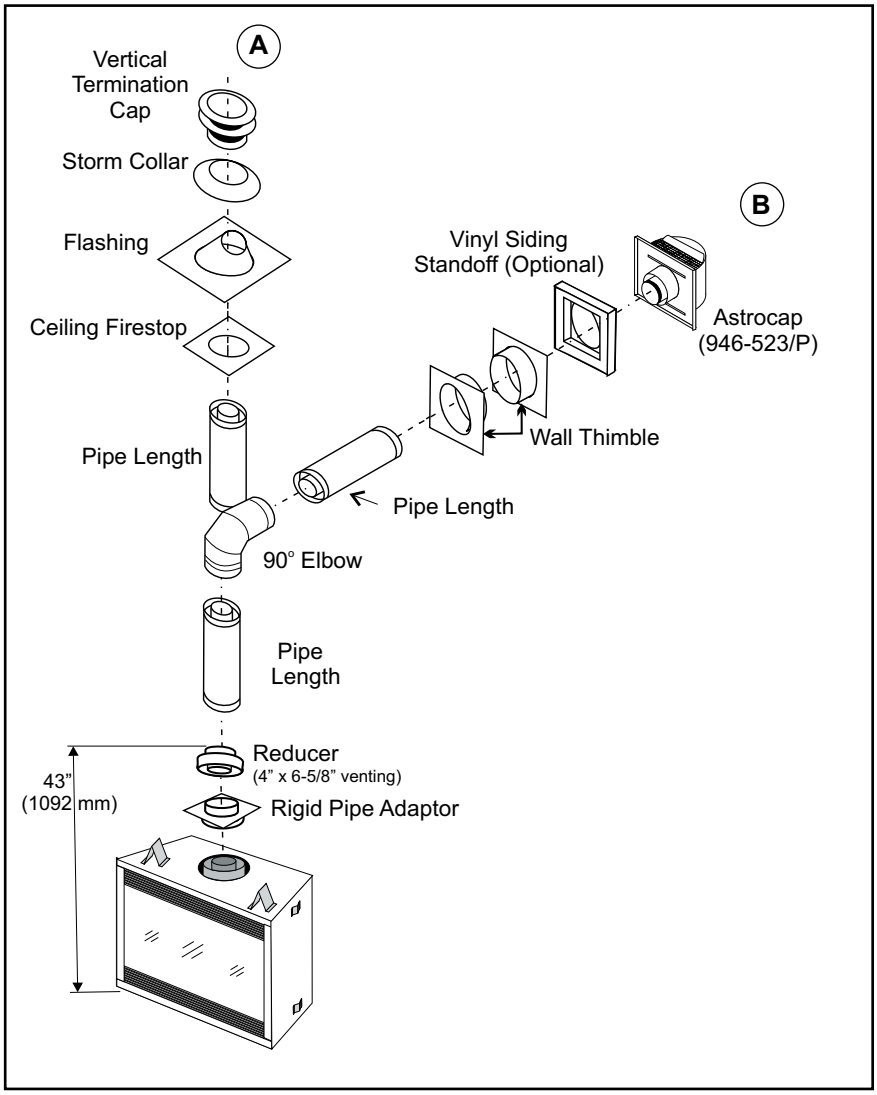

ASTROCAP # 946-523/P DIMENSIONS

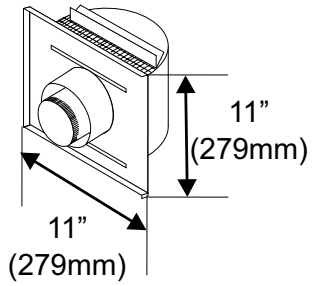

WARNING:

Do not combine venting components from different venting systems.

However use of the the AstroCap™ and Regency Riser is acceptable with all systems.

This product has been evaluated by Intertek when using a rigid pipe adaptor and use of any of the specific chimney systems listed in this manual. Use of these systems with the rigid pipe adaptor is deemed acceptable and does not affect the Intertek WHI listing of these components.

The Regency AstroCap™ and Regency Riser Vent terminal are certified for installations using Regency venting systems as well as any specific chimney systems listed in this manual. AstroCap™ is a proprietary trademark of Regency Fireplace Products.

Horizontal Terminations
Two (2) 90° Elbows (Rigid/Flex Pipe 4" x 6 - 5/8")

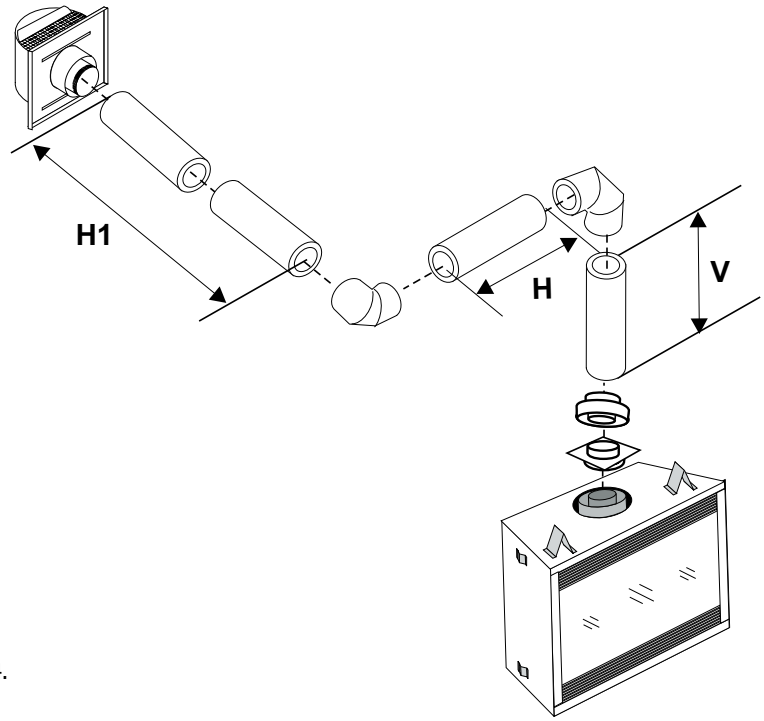

One 90° elbow = Two 45° elbows.

Option	V	H + H1	
A)	0' Min.	2' Max.	With these options, maximum total pipe length is 30 feet with minimum of 6 feet total vertical and maximum 8 feet total horizontal. ***Please note minimum 1 foot between 90° elbows is required.***
B)	1' Min.	3' Max.	
C)	2' Min.	4' Max.	
D)	3' Min.	5' Max.	
E)	4' Min.	6' Max.	
F)	5' Min.	7' Max.	
G)	6' Min.	8' Max	
No Vent Restrictor Installed			

Lengths do not include elbow indicated.
Rigid Pipe - Must use reducer # 946-606 and rigid pipe adaptor #770-994.
Flex Pipe - Must use reducer part #946-758.

Note: For horizontal terminations the Regency Direct Vent Flex System may be used for installations with a maximum continuous vent length of up to 10 feet. If longer runs are required, rigid pipe must be used.

Horizontal Terminations
Three (3) 90° Elbows (Rigid/Flex Pipe 4" x 6 - 5/8")

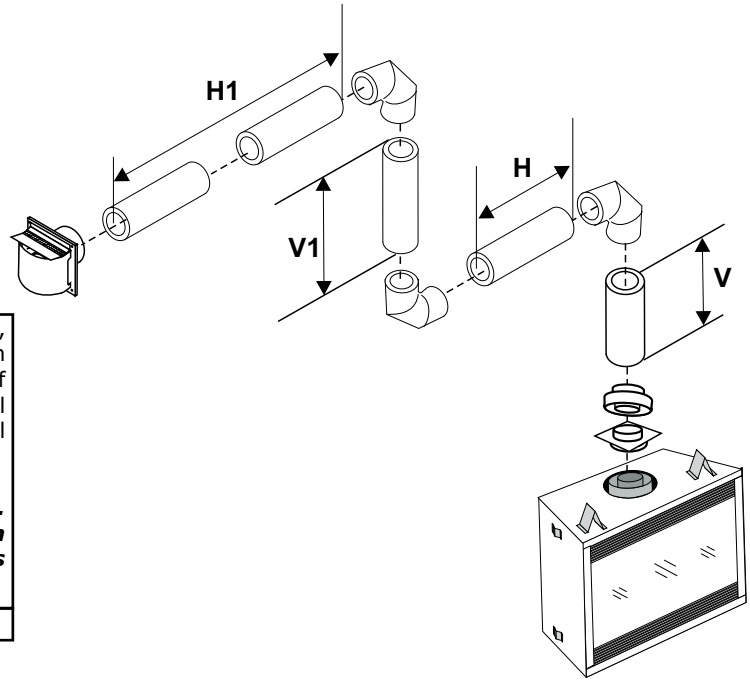

One 90° elbow = Two 45° elbows.

Option	V	H	V + V1	H + H1	
A)	0' Min.	1' Max.	1' Min.	2' Max.	With these options, max. total pipe length is 30 feet with min. of 12 feet total vertical and max. 9 feet total horizontal. ***Please note min. 1 foot between 90° elbows is required.***
B)	1' Min.	2' Max.	3' Min.	3' Max.	
C)	2' Min.	2' Max.	5' Min.	4' Max.	
D)	3' Min.	2' Max.	7' Min.	5' Max.	
E)	4' Min.	3 Max.	9' Min.	6' Max.	
F)	5' Min.	4' Max.	10' Min.	7' Max.	
G)	6' Min.	5' Max.	11' Min.	8' Max.	
H)	7' Min.	6' Max.	12' Min.	9' Max.	
No Vent Restrictor Installed					

Lengths do not include elbow indicated.
Rigid Pipe - Must use reducer # 946-606 and rigid pipe adaptor #770-994.
Flex Pipe - Must use reducer part #946-758.

Note: For horizontal terminations the Regency Direct Vent Flex System may be used for installations with a maximum continuous vent length of up to 10 feet. If longer runs are required, rigid pipe must be used.

Venting Arrangements For Vertical Terminations

Rigid/Flex Pipe 4" x 6-5/8"

Rigid Pipe - Must use Reducer Part # 946-606 & 770-994 Rigid Pipe Adaptor

Flex Pipe - Must use Reducer Part # 946-758

The shaded area in the Diagram shows all allowable combinations of straight vertical and offset to vertical terminations, using two 90° elbows, with **Rigid Pipe Venting Systems** for Propane and Natural Gas. Two 45° elbows equal to one 90° elbow. Maximum of four 45° elbows allowed.

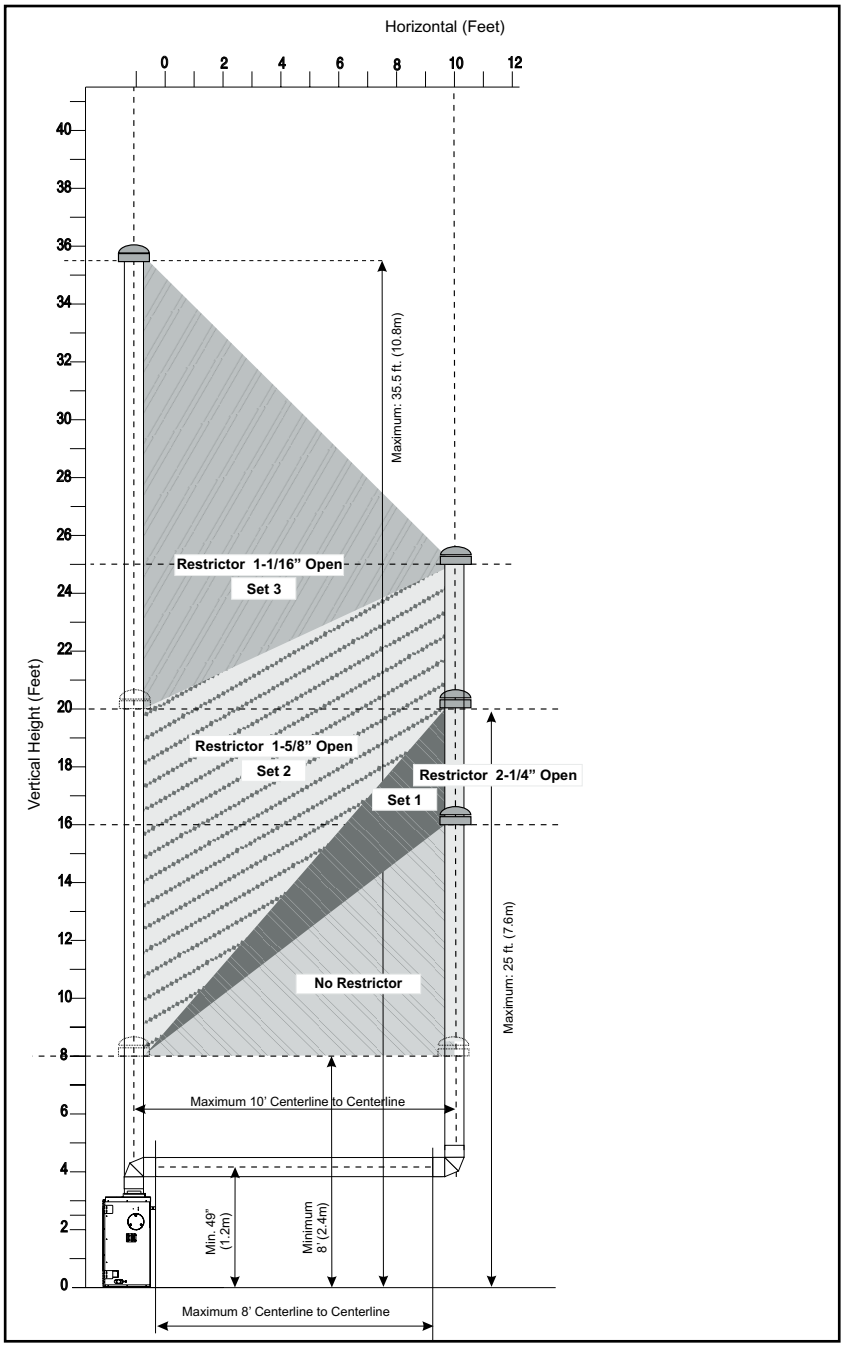

- Vent must be supported at offsets.
- Firestops are required at each floor level and whenever passing through a wall.
- Maintain clearances to combustibles as listed in the "Clearances" section.
- Refer to the "Vent Restrictor Position" section for details on how to change the vent restrictor from the factory setting to 2-1/4" opening,1-5/8"opening and to 1-1/16" opening.

Vertical Terminations
Three (3) 90° Elbows (Rigid/Flex Pipe 4" x 6 - 5/8")

One 90° elbow = Two 45° elbows.

Option	V	H + H1	V + V1	
A)	0' Min.	2' Max.	2' Min.	With these options, max. total pipe length is 30 feet with min. of 10 feet total vertical and max. 8 feet total horizontal. ***Please note min. 1 foot between 90° elbows is required.***
B)	1' Min.	2' Max.	3' Min.	
C)	2' Min.	3' Max.	4' Min.	
D)	3' Min.	4' Max.	6' Min.	
E)	4' Min.	5' Max.	7' Min.	
F)	5' Min.	6' Max.	8' Min.	
G)	6' Min.	7' Max.	9' Min.	
H)	7' Min.	8' Max.	10' Min.	
No Vent Restrictor Installed				

Lengths do not include elbow indicated.
Rigid Pipe - Must use reducer # 946-606 and rigid pipe adaptor #770-994.
Flex Pipe - Must use reducer part #946-758.

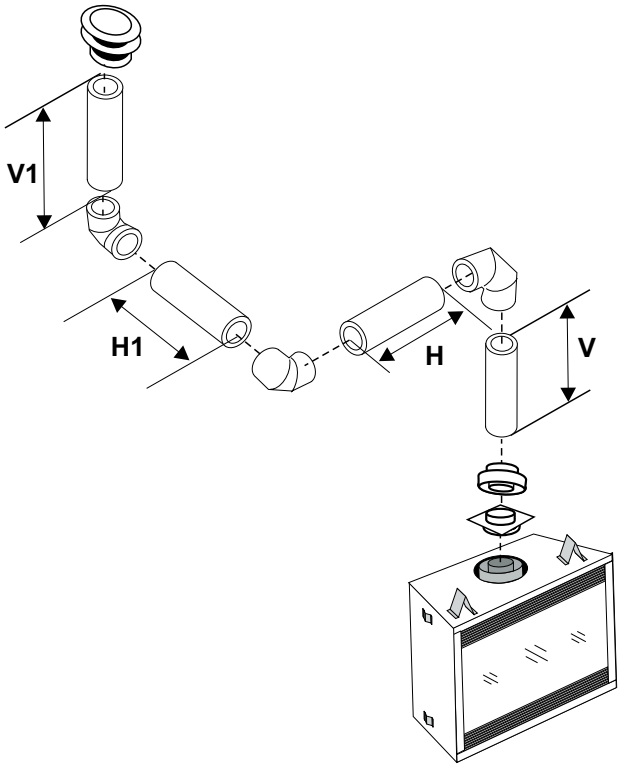

Venting Arrangements With Co-Linear Flex System

THE APPLIANCE MUST NOT BE CONNECTED TO A CHIMNEY FLUE SERVING A SEPARATE SOLID FUEL BURNING APPLIANCE.

Masonry chimneys may take various contours which the flexible liner will accommodate. However, **keep the flexible liner as straight as possible**, avoid unnecessary bending.

The Air Intake pipe must be attached to the inlet air collar of the termination cap.

This appliance is designed to be attached to two 3" (76mm) co-linear aluminium flex running the full length of the chimney. See the Venting Arrangements on next page for minimum and maximum heights.

Required Parts:

Part #	Description
946-529	Co-linear DV Vertical Termination Cap
948-305	3" Flex - 35 ft.
946-563	Co-Axial to Co-Linear Adapter Kit which contains the following: Co-linear Flex Adapter, Outer Pipe, Inner Pipe Adapter
770-994	Rigid Pipe Adaptor
946-606	Vent Reducer

Alternate Approved Caps

46dva-VC	Vertical Termination Cap
46dva-VCH	High Wind Cap
46dva-GK	3" Co-linear Adapter with flashing

NOTE:
See detailed venting arrangements, vertical terminations, co-linear flex system into masonry fireplaces in this manual.

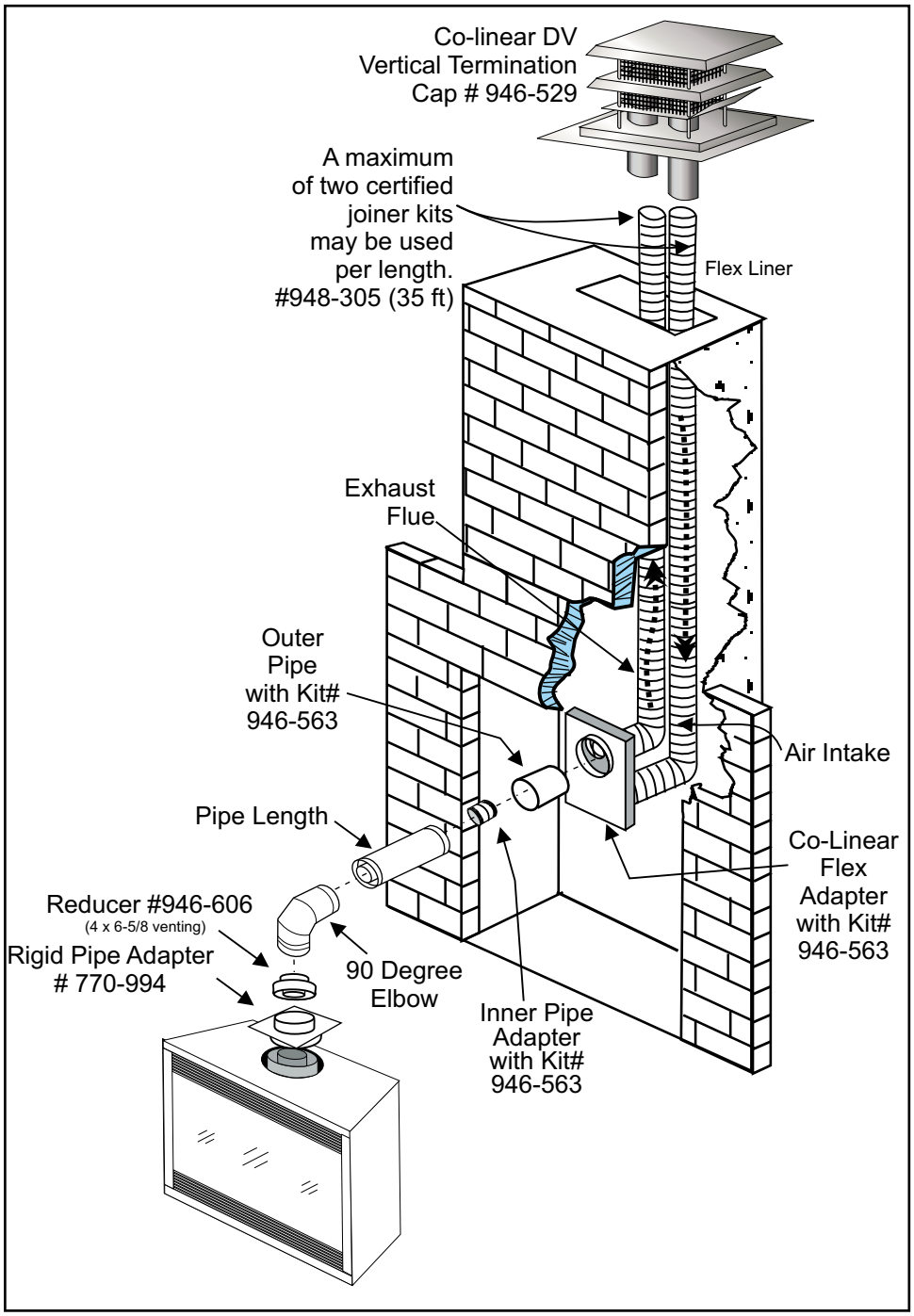

Vertical Terminations

Co-linear Flex System Into Masonry Fireplaces

FOR BOTH RESIDENTIAL & MANUFACTURED HOMES

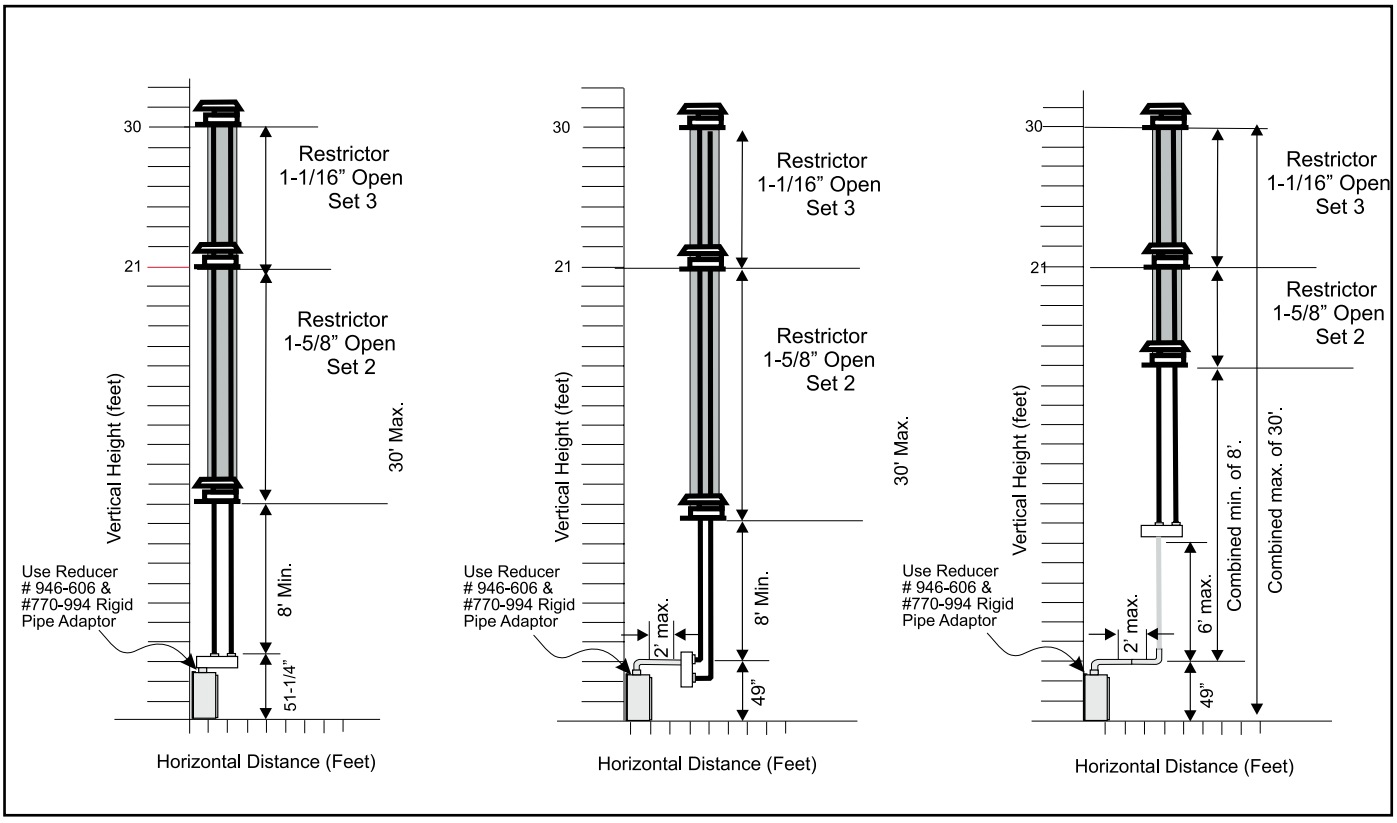

The shaded area in the Diagrams show the allowable vertical terminations.

Unit Installation with Horizontal Termination

4" X 6-5/8" OR 5" X 8" VENTING
(Rigid Vent Systems)

Minimum Vent Clearances to Combustibles

* Clearances noted below must be maintained; except when passing through a wall, ceiling or at the termination where the use of a firestop or wall thimble reduces clearance to 1-1/2" (38mm).

Horizontal Top*	2" (51mm)*
Horizontal Side	1-1/2 " (38mm)
Horizontal Bottom	1-1/2" (38mm)
Vertical Vent	1-1/2" (38mm)

Below are the recommended framing dimensions (inside measurements) for the 4" x 6-5/8" and 5" x 8" rigid vent terminations - for use with a firestop or wall thimble.

Recommended Framed Opening Size	
Vent Size	Framing Size
4" x 6 - 5/8"	10" x 10"
5" x 8"	11" x 11"

Install the vent system according to the manufacturer's instructions included with the components.

1. Set the unit in its desired location. Check to determine if wall studs or roof rafters are in the way when the venting system is attached. If this is the case, you may want to adjust the location of the unit. Rough in the gas preferably on the right side of the unit and the electrical (junction block is on the left side) on the left.
2. Direct Vent pipe and fittings are designed with special twist-lock connections to connect the venting system to the appliance flue outlet. A twist-lock appliance adaptor is required.
3. In conjunction with the Approved Vent system, install the adaptor after the unit is set in its desired location. Put a bead of Mill-Pac inside the outer section of the adapter and a bead of on the inner collar. Slip the adapter over the existing inner and outer flue collar. Fasten to the outer collar only with the 3 supplied screws (drilling pilot holes will make this easier).
4. Level the fireplace and fasten it to the framing using nails or screws through the top and side nailing strips.
5. Assemble the desired combination of pipe and elbows to the appliance adaptor and twist-lock for a solid connection.

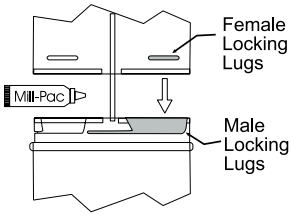

Diagram 1

Note: For best results and optimum performance with each approved venting system, it is highly recommended to apply "Mill-Pac" sealant (supplied) to every inner pipe connection. Failure to do so may result in drafting or performance issues not covered under warranty. Horizontal runs of vent must be supported every 3 feet (0.9meter). Wall straps are available for this purpose.

6. Mark the wall for a square hole.-see chart to left for size. The center of the square hole should line up with the center-line of the horizontal pipe. Cut and frame the square hole in the exterior wall where the vent will be terminated. See Diagram 2 for center line requirements.

   If the wall being penetrated is constructed of non-combustible material, i.e. masonry block or concrete, an 8" (203mm) diameter hole is acceptable.

Note:

a) The horizontal run of vent must be level, or have a 1/4 inch rise for every 1 foot of run towards the termination. Never allow the vent to run downward. This could cause high temperatures and may present the possibility of a fire.

b) The location of the horizontal vent termination on an exterior wall must meet all local and national building codes, and must not be blocked or obstructed. See "Exterior Vent Termination Locations" section for more details.

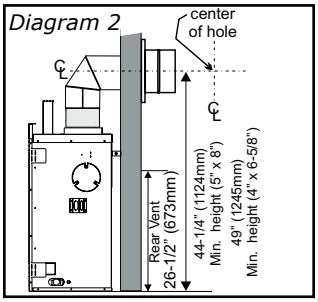

Diagram 2

c) Snorkel Terminations:
For installations requiring a vertical rise on the exterior of the building, 14-inch and 36-inch tall snorkel terminations as shown in Diagram 2 are available, as well as the standard riser vent. Follow the same installation procedures as used for standard horizontal termination. NEVER install the snorkel upside down.

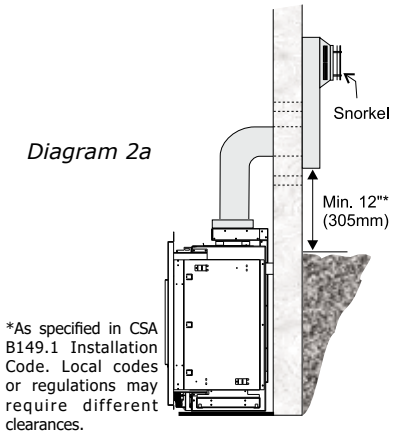

Diagram 2a

*As specified in CSA B149.1 Installation Code. Local codes or regulations may require different clearances.

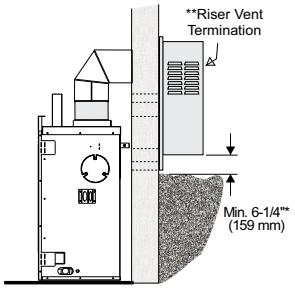

Diagram 2b

**Note: Riser vent is only for use in above grade terminations.

****NOTE: For snorkel terminations in ABOVE grade installations, follow national or local code requirements.**

Vent riser is only available with 4" x 6-5/8" venting. With 5" x 8" venting, use an optional snorkel termination.

Below Grade Snorkel Installation

If the snorkel termination must be installed below grade, i.e. basement application, proper drainage must be provided to prevent water from entering the snorkel termination. Do not attempt to enclose the snorkel within the wall or any other type of enclosure. See diagram 2c.

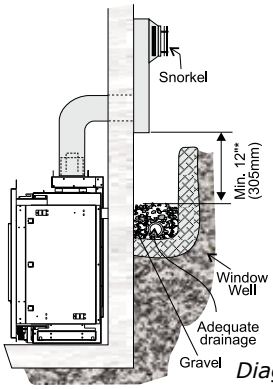

Diagram 2c

7. Ensure that the pipe clearances to combustible materials are maintained (Diagram 5). Install the termination cap.

Note: If installing termination on a vinyl siding covered wall, a vinyl siding standoff or furring strips must be used to ensure that the termination is not recessed into the siding.

The four wood screws provided should be replaced with appropriate fasteners for stucco, brick, concrete, or other types of sidings.

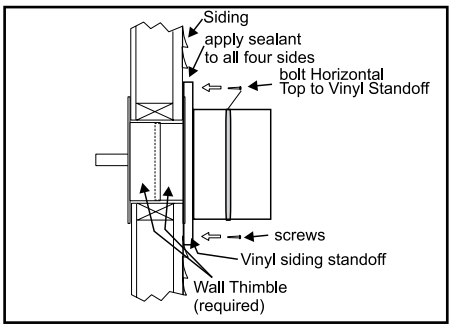

Diagram 3

8. Before connecting the horizontal run of vent pipe to the vent termination, slide the Wall Thimble over the vent pipe. The wall thimble is required for all horizontal terminations.
9. Slide the appliance and vent assembly towards the wall carefully inserting the vent pipe into the vent cap assembly. It is important that the vent pipe extends into the vent cap sufficient distance so as to result in a minimum pipe overlap of 1-1/4 inches (32mm). Secure the connection between the vent pipe and the vent cap.
10. Install wall thimble in the center of the framed hole and attach with wood screws (Diagram 4).

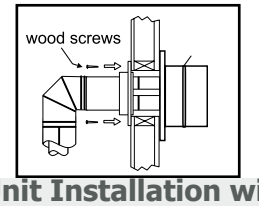

Diagram 4

Unit Installation with Horizontal Termination

5" X 8" VENTING

(Flex Vent Systems)

Minimum Vent Clearances to Combustibles

* Clearances noted below must be maintained; except when passing through a wall, ceiling or at the termination where the use of a firestop or wall thimble reduces clearance to 1-1/2" (38mm).

Horizontal Top	2" (51mm)
Horizontal Side	1-1/2 " (38mm)
Horizontal Bottom	1-1/2" (38mm)
Vertical Vent	1-1/2" (38mm)

Below are the recommended framing dimensions (inside measurements) for the 5" x 8" flex vent terminations - for use with a firestop or wall thimble.

Recommended Framed Opening Size	
Vent Size	Framing Size
5" x 8"	11" x 11"

1. Locate the unit in the framing, rough in the gas (preferably on the right side of the unit). Locate the centerline of the termination and mark wall accordingly. Cut an square hole in the wall - see chart (inside dimension).

Note: If installing termination on a siding covered wall, a vinyl siding standoff or vinyl furring strips must be used to ensure that the termination is not recessed into the siding.

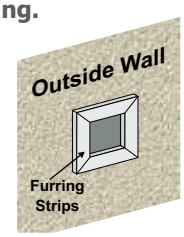

2. Level the fireplace and fasten it to the framing using nails or screws through the nailing strips.
3. Assemble the vent assembly by applying Mill-Pac to the inner flue collar of the termination and slipping the inner flex liner over it at least 1-3/8" (35mm). Fasten with the 3 screws (drilling pilot holes will make this easier). Apply Mill-Pac to the outer flex pipe and slip it over the outer flue collar of the vent terminal at least 1-3/8"(35mm) and fasten with the 3 screws.

NOTE: Horizontal sections must be supported at intervals not exceeding 3 feet (0.9 meter). (Flame picture and performance will be affected by sags in the liner).

4. Separate the 2 halves of the wall thimble and securely fasten the one with the tabs to the outside wall making sure that the tabs are on top and bottom. Fasten the other thimble half to the inside wall. The thimble halves slip inside each other and can be adjusted for 2 x 4 or 2 x 6 walls.
5. Slip the assembled liner and termination assembly through the thimble making sure the termination cap faces up (there are markings on the cap that show which way is up). This will position the termination cap with proper down slope for draining water. Fasten the cap to the outer wall with the 4 supplied screws.
6. Pull the centre inner and outer flex liner out enough to slip over the flue collars of the fireplace. (You may wish to cut the liner shorter to make it more workable.) Do not bend liner more than 90°. ***The liners must slip over the collars a minimum of 1-3/8".***
7. Apply Mill-Pac over the fireplace inner flue collar and slip the inner flex liner down over it and attach with 3 supplied screws.
8. Do the same with the outer flue collar and outer flex liner.
9. Apply a bead of silicone between the thimble and termination and around the outer edge of the terminal at the wall in order to keep the water out.

IMPORTANT: *Do not locate termination hood where excessive snow or ice buildup may occur. Be sure to check vent termination area after snow falls, and clear to prevent accidental blockage of venting system. When using snow blowers, make sure snow is not directed towards vent termination area.*

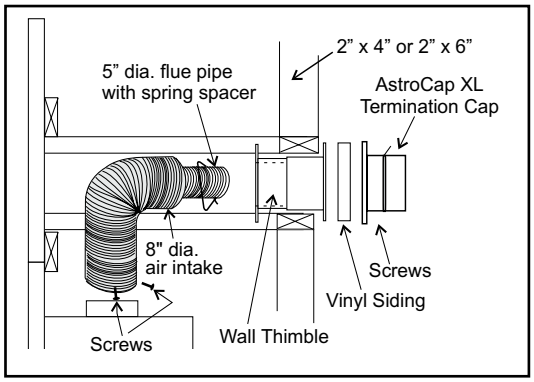

ASTROCAPXL DIMENSIONS (946-623/P)

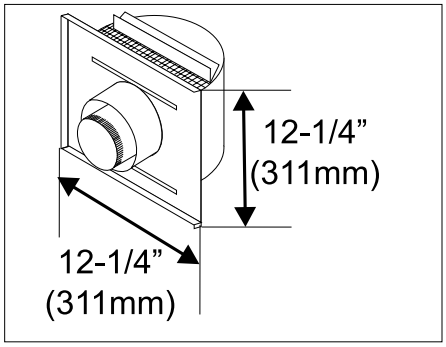

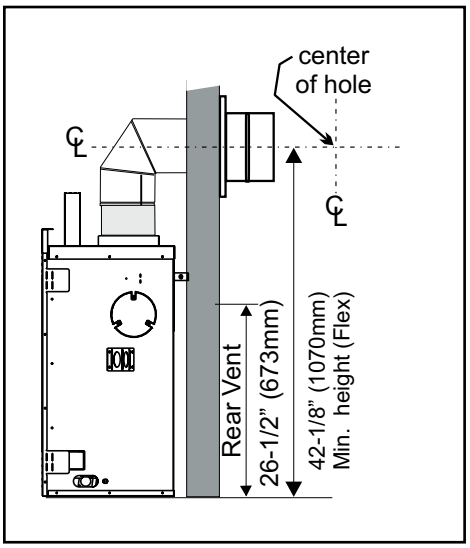

Unit Installation with Vertical Termination

4" X 6-5/8" VENTING

(Rigid Vent Systems)

(Must use Reducer #946-606 and rigid pipe adaptor #770-994)

1. Maintain the 1-1/2" clearances (air spaces) to combustibles when passing through ceilings, walls, roofs, enclosures, attic rafter, or other nearby combustible surfaces. Do not pack air spaces with insulation. Check "Venting" Sections for the maximum vertical rise of the venting system and the maximum horizontal offset limitations.

2. Set the gas appliance in its desired location. Drop a plumb bob down from the ceiling to the position of the appliance flue exit, and mark the location where the vent will penetrate the ceiling. Drill a small hole at this point. Next, drop a plumb bob from the roof to the hole previously drilled in the ceiling, and mark the spot where the vent will penetrate the roof.

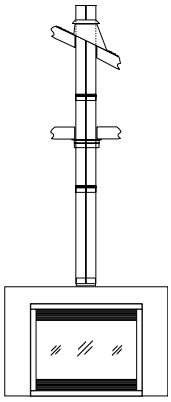

Diagram 1

3. A Firestop spacer must be installed in the floor or ceiling of every level. To install the Firestop spacer in a flat ceiling or wall, cut a 10 inch square hole. Frame the hole as shown in Diagram 2 and install the firestop.

4. Assemble the desired lengths of pipe and elbows. Ensure that all pipes and elbow connections are in the fully twist-locked position and sealed.
5. Cut a hole in the roof centered on the small drilled hole placed in the roof in Step 2. The hole should be of sufficient size to meet the minimum requirements for clearance to combustibles of 1-1/2". Slip the flashing under the shingles (shingles should overlap half the flashing) as per Diagram 3.
6. Continue to assemble pipe lengths.

Note: All vertical terminations are vented using 4" x 6-5/8" venting and reducer #946-606 and rigid pipe adaptor #770-994.

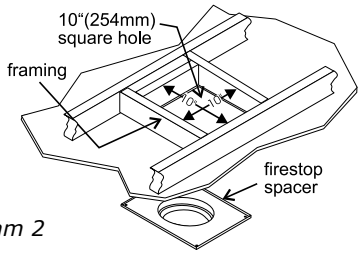

Diagram 2

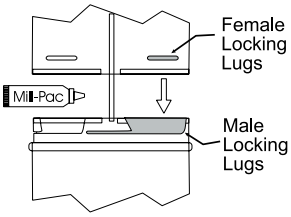

<u>NOTE:</u> For best results and optimum performance with each approved venting system, it is highly recommended to apply "Mill-Pac" sealant (supplied) to every inner pipe connection. Failure to do so may result in drafting or performance issues not covered under warranty.

Note: If an offset is necessary in the attic to avoid obstructions, it is important to support the vent pipe every 3 feet, to avoid excessive stress on the elbows, and possible separation. Wall straps are available for this purpose.

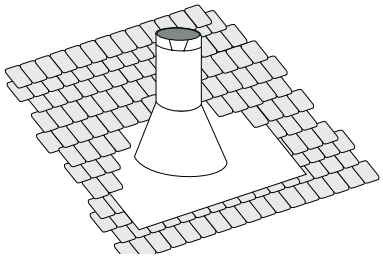

Diagram 3: The upper half of the flashing is installed under the roofing material and not nailed down until the chimney is installed. This allows for small adjustments.

Galvanized pipe is desirable above the roofline due to its higher corrosion resistance. Continue to add pipe sections through the flashing until the height of the vent cap meets the minimum height requirements specified in Dia. 4 or local codes. Note that for steep roof pitches, the vertical height must be increased. A poor draft, or down drafting can result from high wind conditions near big trees or adjoining roof lines, in these cases, increasing the vent height may solve the problem.

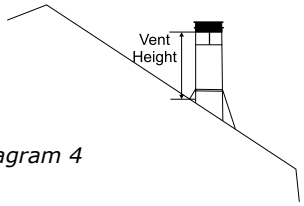

Diagram 4

	Minimum Vent Height	
Roof Pitch	Feet	Meters
flat to 7/12	2	0.61
over 7/12 to 8/12	2	0.61
over 8/12 to 9/12	2	0.61
over 9/12 to 10/12	2.5	0.76
over 10/12 to 11/12	3.25	0.99
over 11/12 to 12/12	4	1.22
over 12/12 to 14/12	5	1.52
over 14/12 to 16/12	6	1.83
over 16/12 to 18/12	7	2.13
over 18/12 to 20/12	7.5	2.29
over 20/12 to 21/12	8	2.44

7. Ensure vent is vertical and secure the base of the flashing to the roof with roofing rails, slide storm collar over the pipe section and seal with a mastic.

8. Install the vertical termination cap by twist-locking it.

Note: Any closets or storage spaces, which the vent passes through must be enclosed.

Gas Line Installation

The gas line is brought through the right side of the appliance. The gas valve is situated on the right hand side of the unit and the gas inlet is on the right hand side of the valve.

The gas line connection may be made of rigid pipe, copper pipe or an approved flex connector. (If you are using rigid pipe, ensure that the valve can be removed for servicing.) Since some municipalities have additional local codes it is always best to consult with your local authorities and the CSA B149.1 installation code.

For USA installations follow local codes and/or the current National Fuel Gas Code, ANSI Z223.1.

When using copper or flex connectors use only approved fittings. Always provide a union so that gas lines can be easily disconnected for servicing. Flare nuts for copper lines and flex connectors are usually considered to meet this requirement.

Important: Always check for gas leaks with a soap and water solution or gas leak detector. Do not use open flame for leak testing.

Pilot Adjustment

Periodically check the pilot flames. Correct flame pattern has two strong blue flames: 1 flowing around the flame sensor and 1 flowing across the burner (it does not have to be touching the burner).

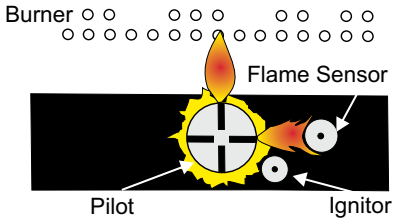

Note: If you have an incorrect flame pattern, contact your Regency® dealer for further instructions.

Incorrect flame pattern will have small, probably yellow flames, not coming into proper contact with the rear burner or flame sensor.

High Elevation

This unit is approved in Canada for altitude to 4500 ft. (CSA 2.17). For Natural Gas installations above 4500 ft. follow current CSA B149.1.

B36XTE - NG11 System Data	
Conversion Kit # 576-969 For 0 to 4500 feet altitude **Burner Inlet Orifice Sizes:** #35	
Max. Input Rating **Min. Input Rating**	31,000 Btu/h 21,500 Btu/h
Supply Pressure	min.5.0" w.c.
Manifold Pressure (High) **Manifold Pressure (Low)**	3.5"+/- 0.2" w.c. 1.6"+/- 0.2" w.c.

B36XTE - LP11 System Data	
For 0 to 4500 feet altitude **Burner Inlet Orifice Sizes:** #51	
Max. Input Rating **Min. Input Rating**	31,000 Btu/h 25,000 Btu/h
Supply Pressure	min.11.0" w.c.
Manifold Pressure (High) **Manifold Pressure (Low)**	10"+/- 0.2" w.c. 6.4"+/- 0.2" w.c.

Gas Pipe Pressure Testing

The appliance must be isolated from the gas supply piping system by closing its individual manual shut-off valve during any pressure testing of the gas supply piping system at test pressures equal to or less than 1/2 psig. (3.45 kPa). Disconnect piping from valve at pressures over 1/2 psig.

The manifold pressure is controlled by a regulator built into the gas control, and should be checked at the pressure test point.

Note: To properly check gas pressure, both inlet and manifold pressures should be checked using the valve pressure ports on the valve.

1. Make sure the valve is in the "OFF" position.
2. Loosen the "IN" and/or "OUT" pressure tap(s), turning counterclockwise with a 1/8" wide flat screwdriver.
3. Attach manometer to "IN" and/or "OUT" pressure tap(s) using a 5/16" ID hose.
4. Light the pilot and turn the valve to "ON" position.
5. The pressure check should be carried out with the unit burning and the setting should be within the limits specified on the safety label.
6. When finished reading manometer, turn off the gas valve, disconnect the hose and tighten the screw (clockwise) with a 1/8" flat screwdriver. ***Note: Screw should be snug, but do not over tighten.***

885 S.I.T. Valve Description

1) 6 Stage flame adjustment
2) Pilot adjustment
3) Inlet Pressure Tap
4) Outlet Pressure Tap
5) Pilot Outlet
6) Main Gas Outlet
7) Main Gas Inlet

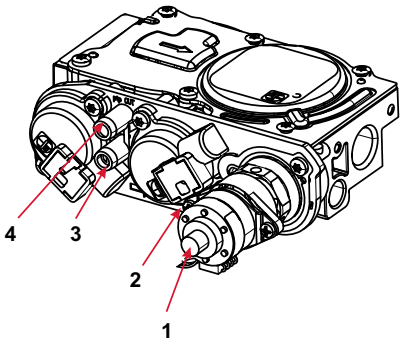

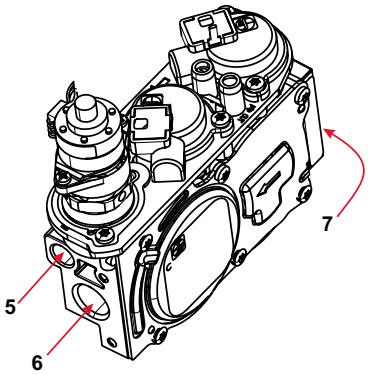

Conversion Kit #578-977 from NG to LP

for B36XTE using SIT 885 NOVA Gas Valve

THIS CONVERSION MUST BE DONE BY A QUALIFIED GAS FITTER
IF IN DOUBT DO NOT DO THIS CONVERSION !!

Each Kit contains one LP Conversion Kit # 578-977

Conversion Kit Contains:

Qty.	Part #	Description
1	904-645	Burner Orifice #51
1	904-529	5/32" Allen Key
1	918-590	Decal "Converted to LPG"
1	908-528	Red "LP" label
1	910-037	LP Injector (Pilot Orifice)
1	911-011	Stepper Motor
1	920-033	Instruction Sheet

Installation of LP Conversion Kit:

1. **Shut off the gas and electrical supply.**
2. Remove the mesh barrier.
3. Open the flush door and remove the door.
4. Remove the logs and embers (if already installed).
5. Loosen the 2 screws holding the Burner Assembly to the firebox base. Slide the Burner Assembly to the left to release it from the orifice and lift out.

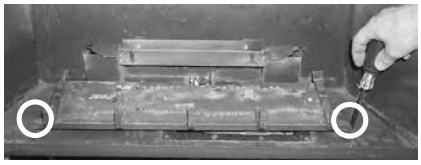

Remove the 2 screws, push Burner Assembly to the left and lift out.

Installer Notice:

These instructions must be left with the appliance.

6. Remove the pilot shield by removing 2 screws.

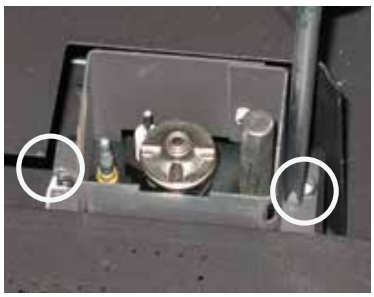

7. Remove the wire clip below the pilot cap.

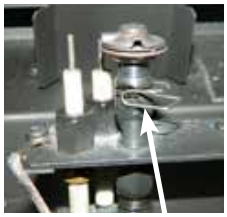

Pilot retainer clip

8. Pull off the pilot cap to expose the pilot orifice.

9. Unscrew the pilot orifice with the allen key; then replace with the LPG pilot orifice, provided in the kit.

10. Re-install pilot cap, wire clip and pilot shield.
11. Remove burner orifice with a 1/2" wrench. Use another wrench to hold on to the elbow behind the orifice. Discard orifice.
12. Reinstall new burner orifice LPG stamped #51 and tighten.

13. Remove regulator and discard. Install the Hi/Lo pressure regulator onto the valve with 2 screws as shown below.

14. Reinstall burner assembly.
15. Adjust aeration accordingly.- see manual for details.
16. Attach the label "This unit has been converted to LPG" near or on top of the serial # decal.
17. Replace yellow "NG" label with red "LPG" label.
18. Reverse steps 4 - 1.
19. Check for gas leaks.
20. Check inlet and outlet pressures.
21. Check operation of flame control.

Brick Panel Installation

Dangerous operating conditions may occur if the panels are broken.
Handle with care. DO NOT FORCE INTO POSITION.

1) Unwrap the Brick Panels from the protective wrapping.

2) Ensure that the logs are not in the unit.

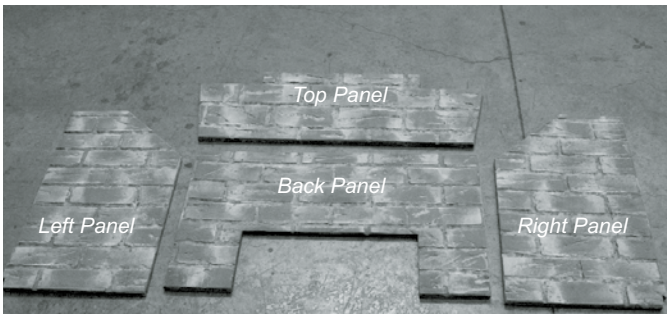

3) Remove the heat deflector (if installed) by removing the 2 screws securing the heat deflector from the top of the firebox.

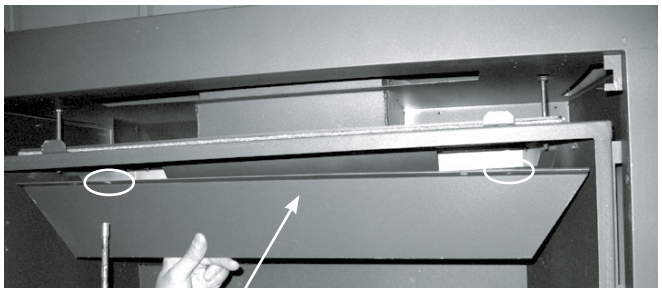

Heat deflector

4) Install the back brick panel first - use caution when clearing the burner assembly and rear log tray so the panel is not damaged.

Note: Ensure that an equal space (gap) is maintained on both the right and left side - when installing the back panel.

Back Panel Installed

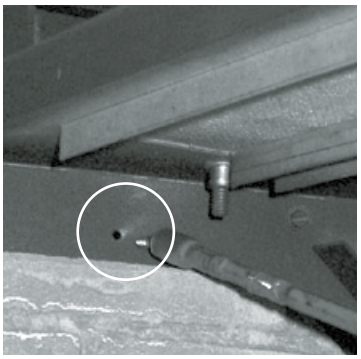

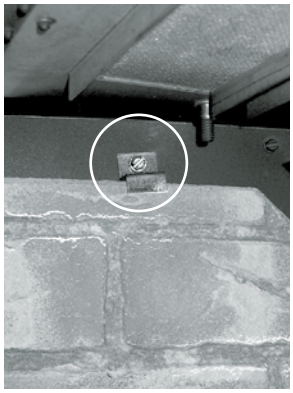

5) Remove the hex head screw on the upper left side of the firebox wall.
Position left brick panel in place and secure with the brick panel clip and screw.

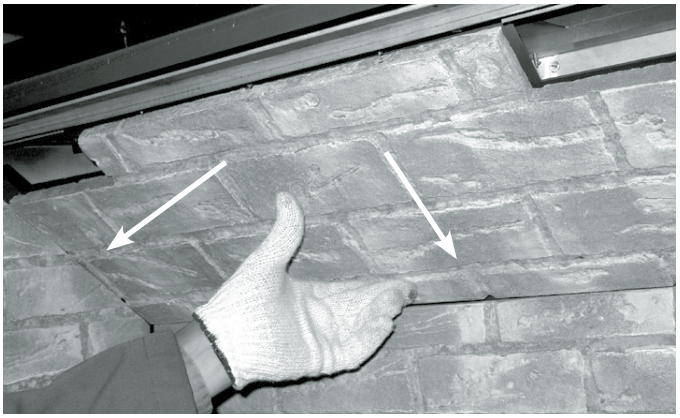

6) Slide top brick panel under left and back brick panel, use care not to damage panel.

7) Right brick panel is installed last, follow the same procedure as for left panel (see step 5).

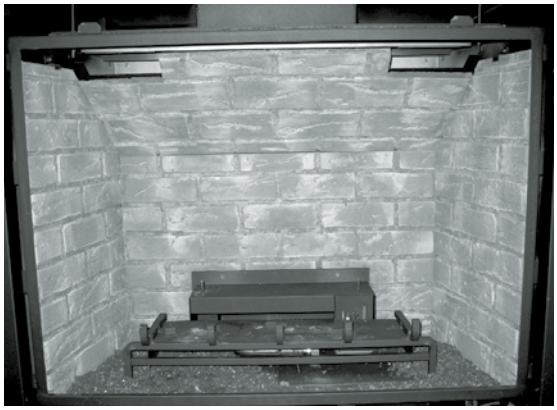

Final Brick Panel Installation

8) Reinstall top heat deflector (reverse Step 3).

Optional Enamel Panel Installation

Black Enamel Panels
• Black Enamel panels must be inspected for scratches and dimples prior to installation. All claims to be recorded at this time. Claims for damage after installation will not receive consideration.
• Black Enamel panels will discolor a little during normal operation. This is normal and should not be considered a defect.
* All hand and finger marks **MUST** be cleaned off with a soft cloth. Use an ammonia based cleaner (ie. glass cleaner) to remove any fingerprints before applying heat to the unit. **Failure to do this will result in burn stains on panels which you will be unable to remove.** Not protected by product warranty.

Diagram 1

1) Remove the heat deflector by removing the 2 screws securing the heat deflector to the top of the firebox (see Diagram 2).

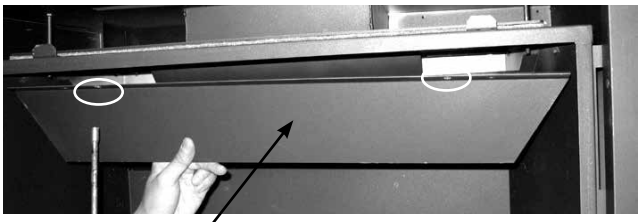

Diagram 2

2) Install the back panel first - use care when clearing the burner assembly and rear log tray, so panel is not scratched.

NOTE: Orient the panel so the fold in the metal faces towards inside the firebox.

Diagram 3

3) Install the top panel next - slide the panel in over top of the back panel (see inset A).

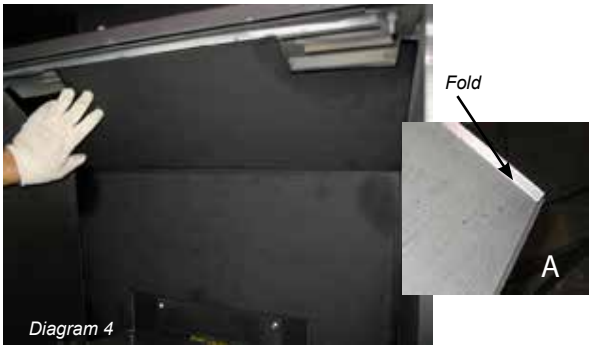

Diagram 4

4) Remove 1 screw (see inset A), position right side panel in firebox - position panel clip in place and secure with 1 screw (see inset B). Tighten the screw.

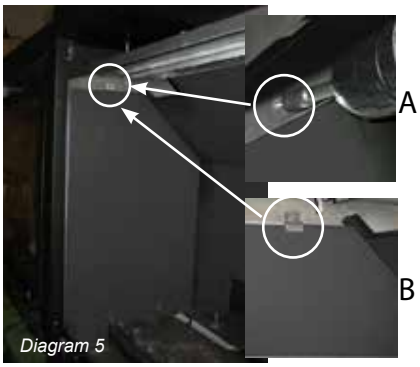

Diagram 5

5) Repeat step 4 for left side panel.

6) Reverse step 1.

Final Installation *Diagram 6*

Log Set Installation

Installation of Optional Panels must be completed before installing the log set.

Read the instructions below carefully and refer to the images. If the logs are broken do not use the unit until they are replaced. Broken logs can interfere with pilot operation.

Improper positioning of the logs may create carbon build-up and can alter the unit's performance which is not covered under warranty.

Log Kit #578-930 contains the following pieces:

A	Right Front Log
B	Left Front Log
C	Top Middle Log
D	Top Right Log
E	Rear Log
902-156	Lava Rocks
902-179	Vermiculite
946-669	Platinum Embers (supplied w/packaged manual)

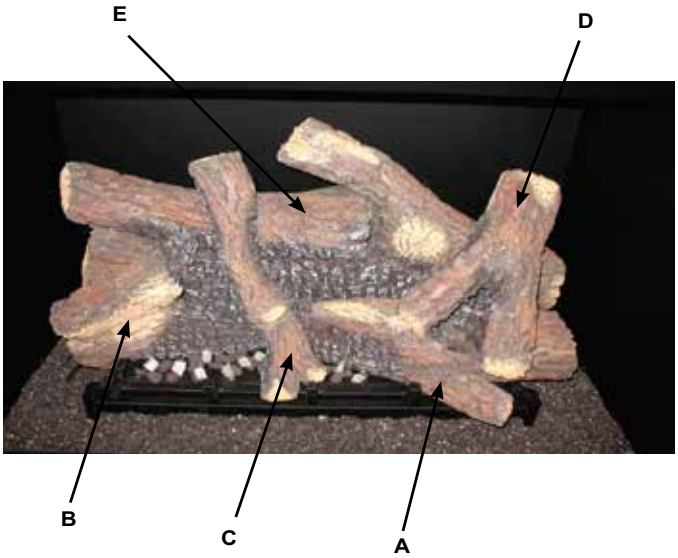

1) Carefully remove the logs from the packaging and unwrap them. The logs are fragile, handle with care - **do not force into position.**

2) Spread vermiculite along the base of the firebox.

3) Place Log E on the rear log support pins with the flat side to the back.

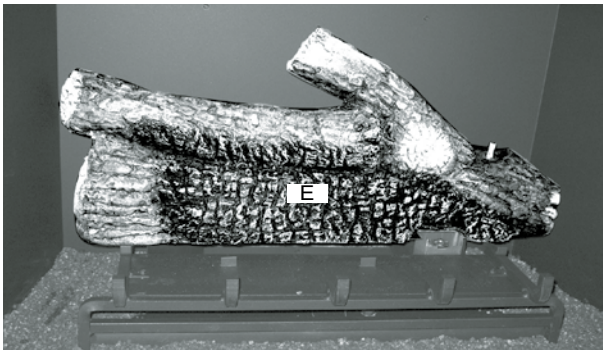

4) Place Log B on the front left side of the burner. Position the notch on the bottom left side of the log into the left side of the grate.

Slide Log B back towards Log E until the flat surface on Log B rests up against the tabs on the burner and grate - this maintains a necessary gap between Logs B & E.

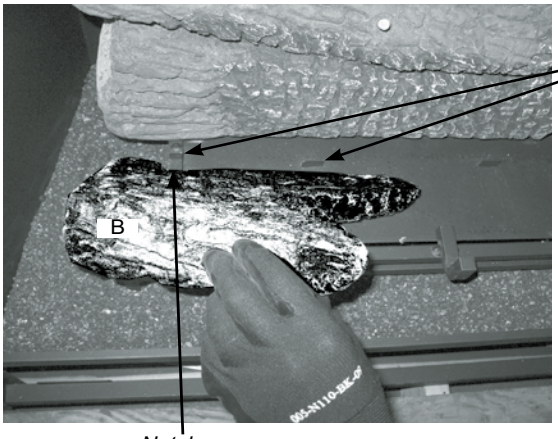

Note: See final positioning of Log B on next page.

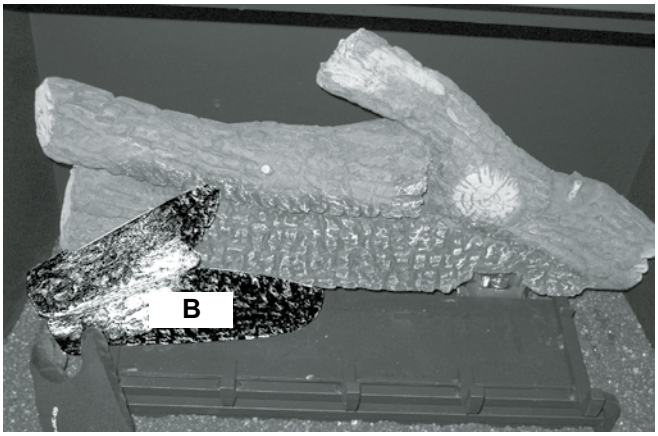

5) Place Log A on the front right side of the burner. Position the notch on the bottom right side of the log into the right side of the grate.

Slide Log A back towards Log E until the flat surface on Log A rests up against the tabs on the burner and grate - this maintains a necessary gap between Logs A & E.

Note: Use the notch on the bottom of Log A as a guide -see below.

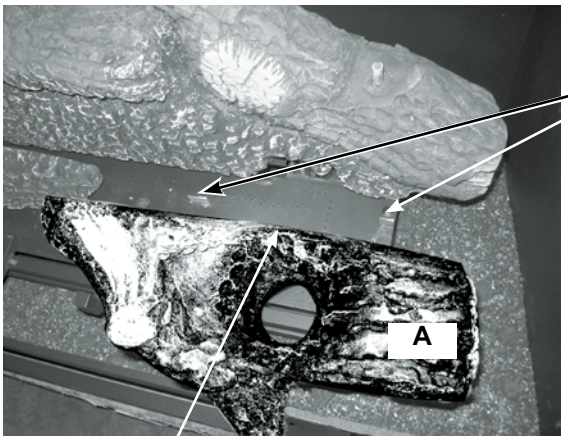

Back of Log A

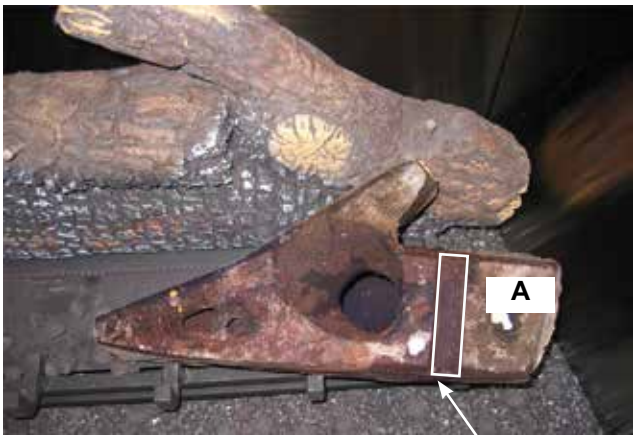

Notch location on underside of Log A (runs from back - front)

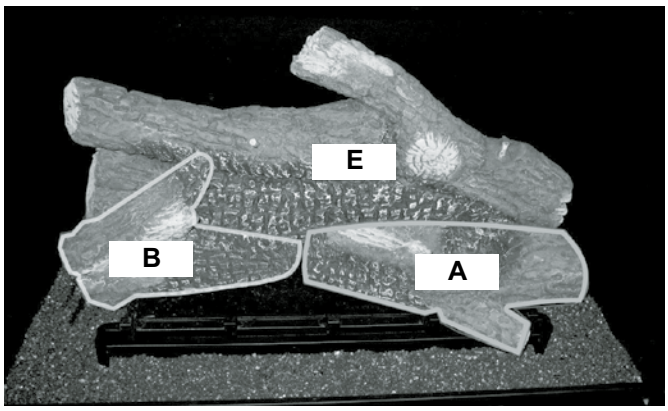

6) Position Log D with the flat side toward Log E. Fit Log D into right peg on Log E.

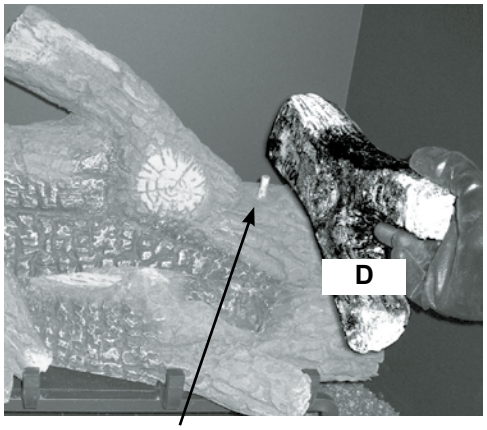

Right Peg - Log E

7) The notch on the bottom of Log D rests against the knot on Log A (as shown below).

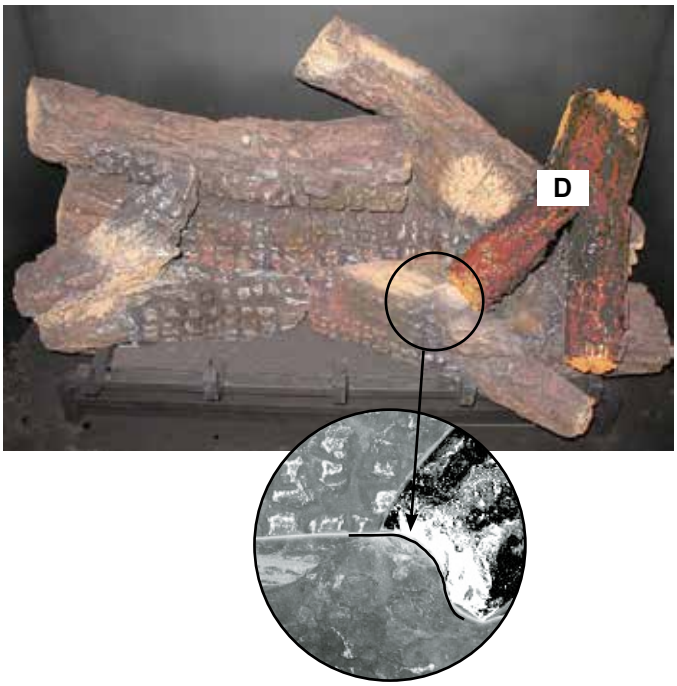

8) Place the lava rocks on the front of the burner tray in the places shown in the photo.

Separate platinum embers and place on the front of the burner tray in and around the lava rocks. Avoid stacking platinum embers. Platinum embers may be placed over burner ports.

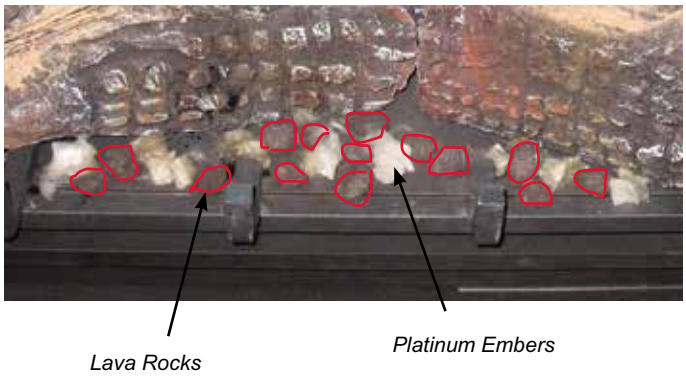

9) Position Log C with the flat side toward Log E.
Fit Log C onto left peg on Log E - the notch on the bottom of Log C rests against the 3rd (from the left) grate post.

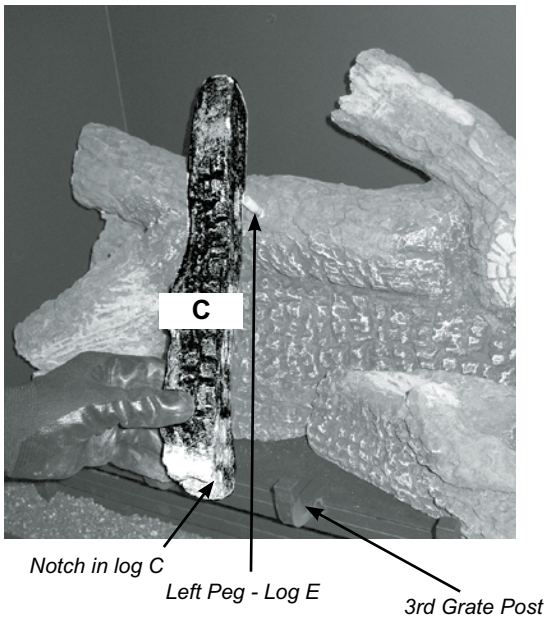

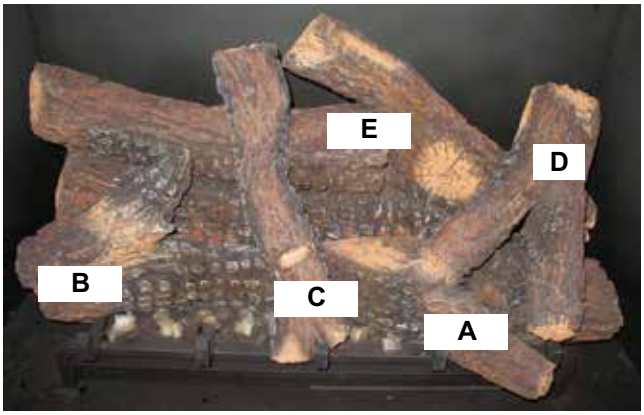

10) Test fire to ensure proper light off (make sure flame flows smoothly from one end of the burner to the other). If there is any flame hesitation, check that area for any blockage of the burner ports.

Aeration Adjustment

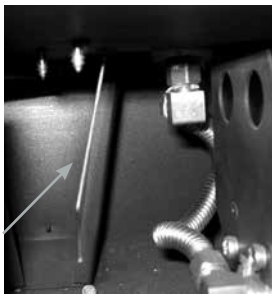

Air shutter rod - located to the left of the valve assembly.

The burner aeration is factory set but may need adjusting due to either the local gas supply or altitude. Open the air shutter for a blue flame or close for a more yellow flame.

Minimum Air Shutter Opening:

NG	1/4"
LP	3/8"

CAUTION: *Carbon will be produced if air shutter is tightly closed.*

Note: Any damage due to carboning resulting from improperly setting the aeration controls is NOT covered under warranty.

Wiring Diagram

This heater does not require a 120V A.C. supply for operation but it is highly recommended to install the supplied AC adaptor to eliminate the need for batteries. In case of a power failure, the burner switch and the optional remote control will continue to operate if batteries are installed in the receiver.. However, a 120V A.C. power supply is needed for the fan/blower operation.

(Do not cut the ground terminal off under any circumstances.)

NOTE: Even if the fan is not purchased with the unit, it is still a good idea to bring power to the receptacle box (provided with the unit) in case the fan is installed at a later date.

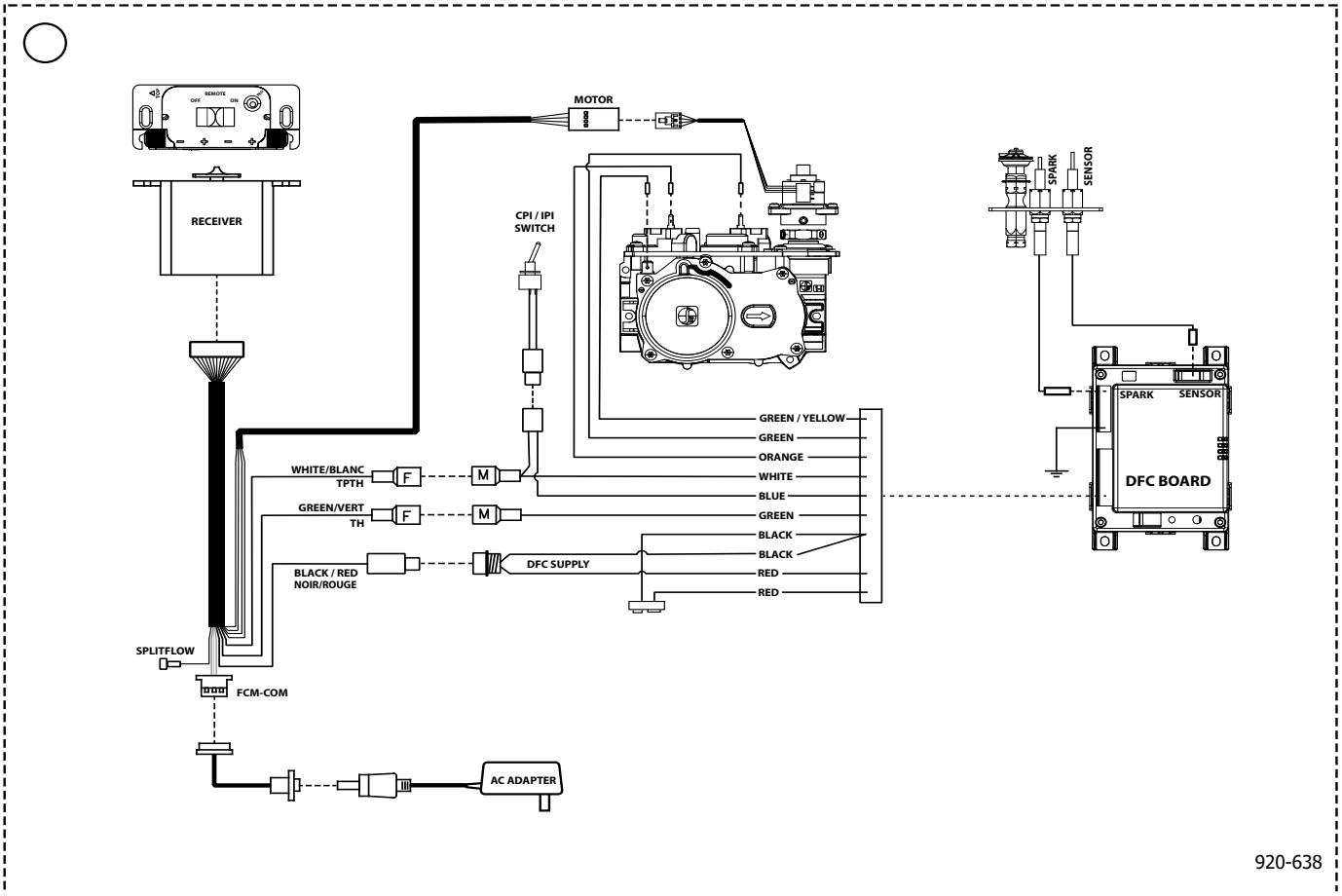

Caution: Ensure that the wires do not touch any hot surfaces and are away from sharp edges.

CAUTION: Label all wires prior to disconnection when servicing controls. Wiring errors can cause improper and dangerous operation.

Optional Fan Installation

Important: 120 Volt AC power is needed for the blower. The receptacle box will be installed on the left hand side of the unit and will need to be wired by a qualified electrician prior to fan assembly being installed. The neutral (wider) slot of the polarized receptacle should be at the top.

Unit must be grounded at all times. Do not cut the ground terminal off under any circumstances.

1. **Shut the power off.**
2. Remove the mesh barrier and standard flush door.
3. Remove fan assembly from box, locate green ground wire and pull out of fan assembly - taking care not to damage or cut wire casing.

4. Connect the **Black** wire to the left side terminal of the fan motor. Slide the black wire and the green ground wire into grommet and push grommet into the fan assembly housing.
5. Connect the **White** wire onto the right side terminal of the fan motor, Connect the red wire into the grommet and push grommet into the fan assembly housing.

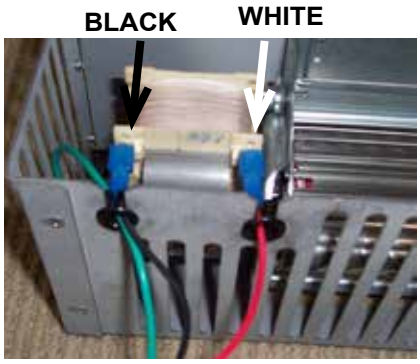

6. Position the fan base with the motor end towards the rear of the firebox and then slide the fan in towards the rear of the unit. Turn the fan housing slightly to the left and make the fan assembly parallel to the rear wall.

NOTE: If optional accent lights are installed,take care when sliding the fan into position. Fan must be maneuvered around the right side of the light.

7. Lift the fan housing upwards and slip it over the two mounting pins (use of dish soap will help the rubber grommets slide down over the pins).

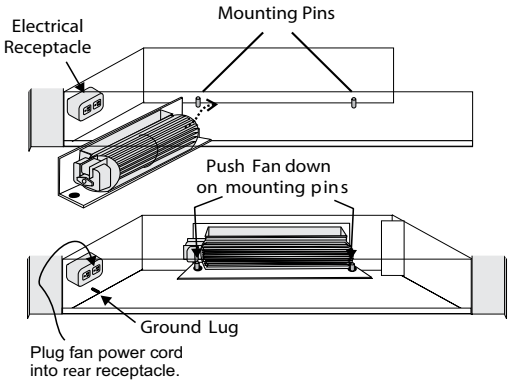

8. Connect and secure fan ground cable to ground lug.

9. Slide the thermodisc/cover assembly onto the bracket clip on the left underside of the firebox. Ensure that no wires will touch hot surfaces.

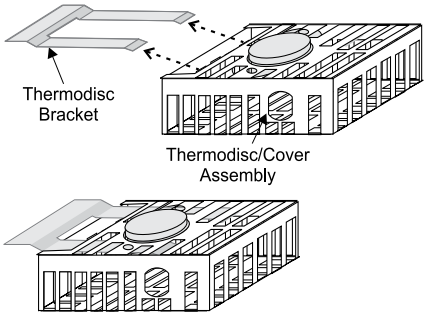

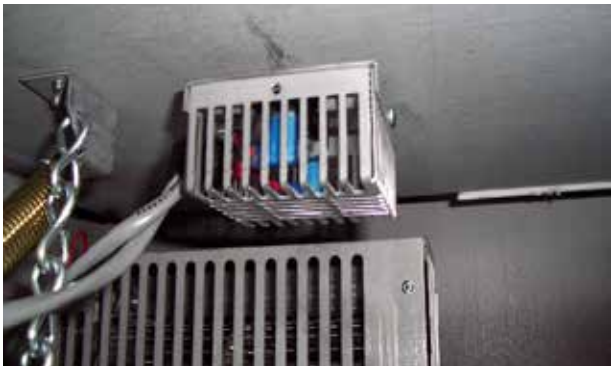

10. Install the Fan Control Module (FCM) on to the left side base of the unit and plug in to electrical receptacle in unit as shown.

11. Plug in the fan power cord to the Fan Control Module into the outlet marked “Fan”. Plug the FCM-COM wire from the remote control wiring harness into the location on the Fan Control Module marked “COM”. Turn the switch on the Fan Control Module to the ON position. ON is to the left. The “O” is the off position

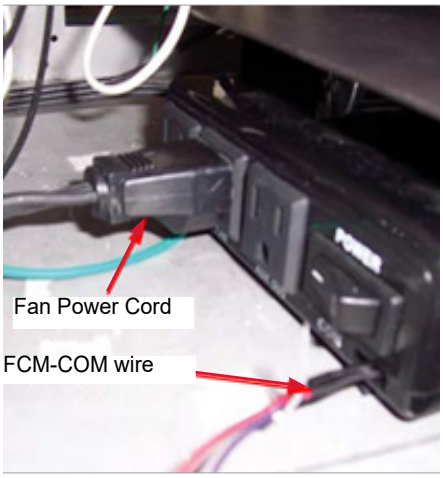

12. See the Proflame instructions for coding the remote handheld to the receiver and for operating instructions.

13. Reverse Steps 2 -1 to complete the installation.

TO REMOVE THE FAN

1. Shut the power off.

2. Reverse the above instructions.

Note: The bearings are lubricated for life. Do not lubricate them. Make sure you vacuum the fan area on a regular basis.

IMPORTANT:
These fans collect a lot of dust from within your home. Ensure you maintain these fan motors on a regular basis by vacuuming out the fan blades and housing using a soft brush nozzle.

Wiring Diagram with Optional Fan

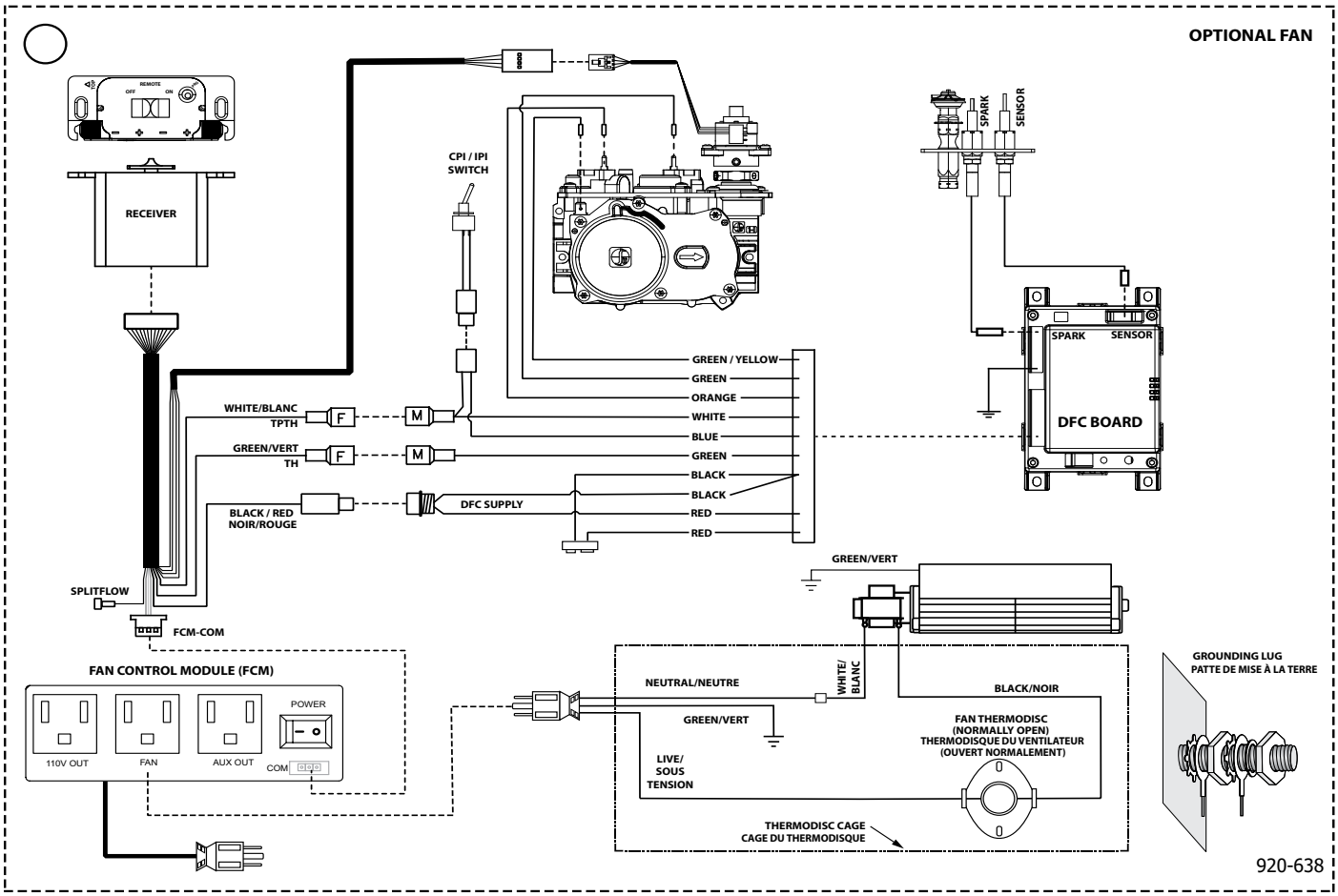

Caution: Ensure that the wires do not touch any hot surfaces and are away from sharp edges.

CAUTION: Label all wires prior to disconnection when servicing controls. Wiring errors can cause improper and dangerous operation.

Optional Wall Thermostat Installation

A wall thermostat may be installed if desired.

Recommended: Wall Thermostat should be mounted beside the Remote/ Unit Receiver which comes standard with the appliance.

1) Run wires from thermostat into the unit.

2) Remove the green wire marked (TH) at the white connector - shown below. The noted wires will be located near the gas valve.

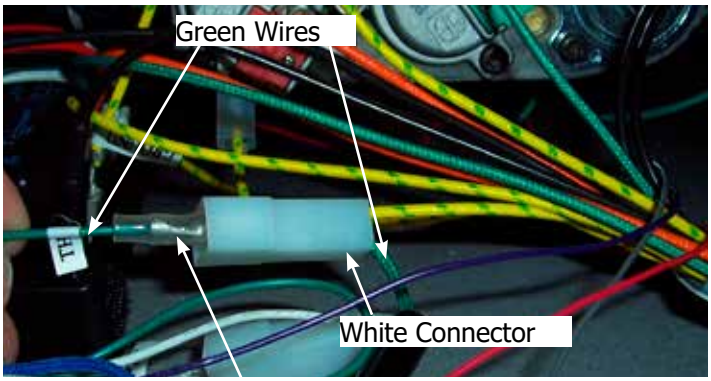

Disconnect greenTH wire

3) Connect one thermostat lead to female connector, using male spade connector - see picture below.

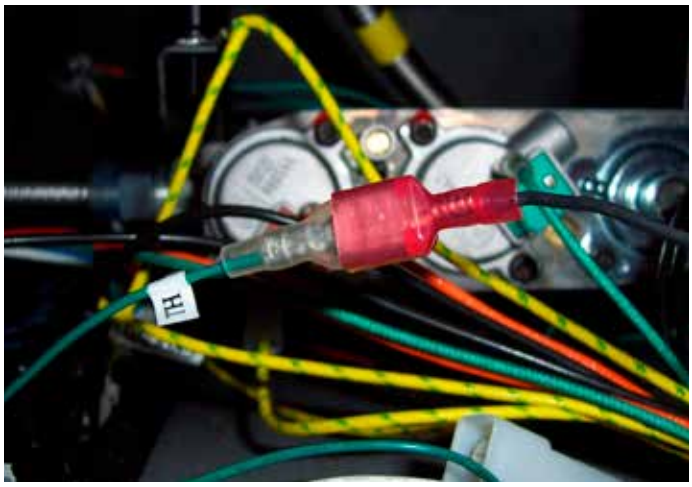

4) Connect the other thermostat lead to male connector disconnected from Step 1 using a female spade connector - see picture below.

When complete turn remote receiver to the <ON> position. Unit will now operate using the wall thermostat.

NOTE: When the remote receiver is set to <ON> position, the remote control transmitter and all of its features are now disabled.

CAUTION
Do not wire Thermostat wires to 120V wire.

Flush Glass Door Installation

1) Line up slots on flush glass door with tabs in firebox. Hook slots on to tabs and lower door slowly (See Diagram 1).

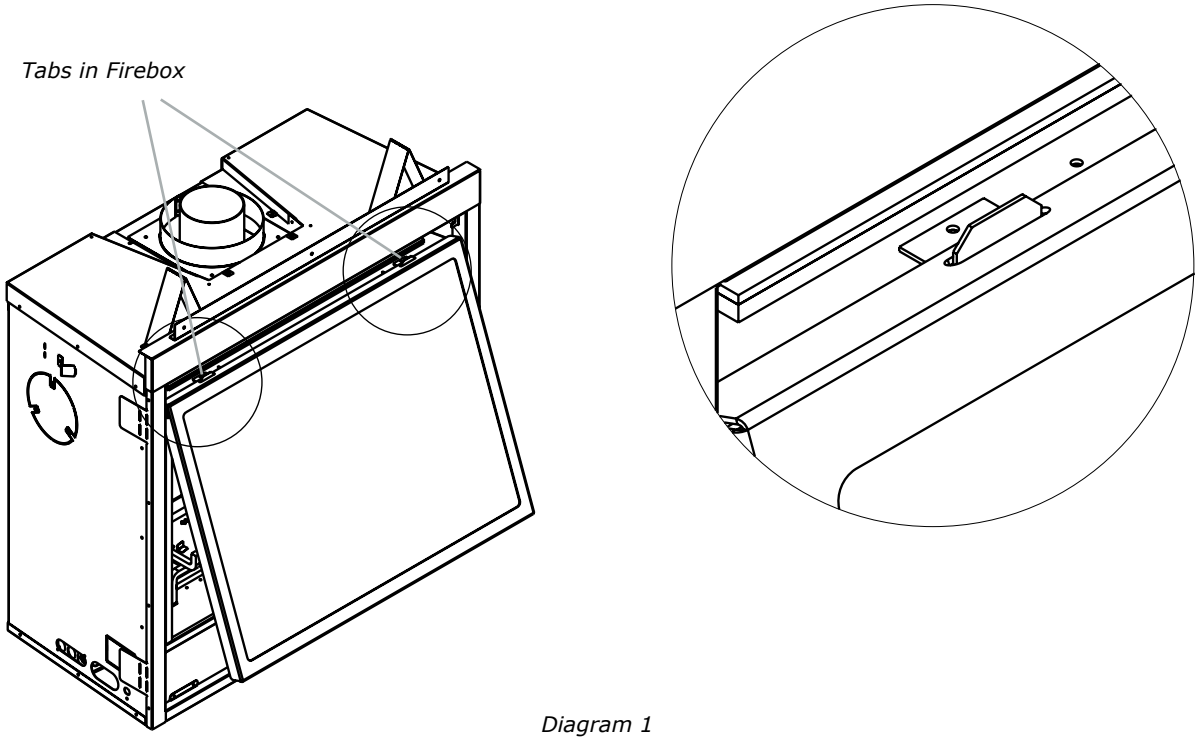

Diagram 1

2) Lower the flush door, then hook the 2 adjustable tension latches - close the latches to secure the flush door(See Diagram 2).

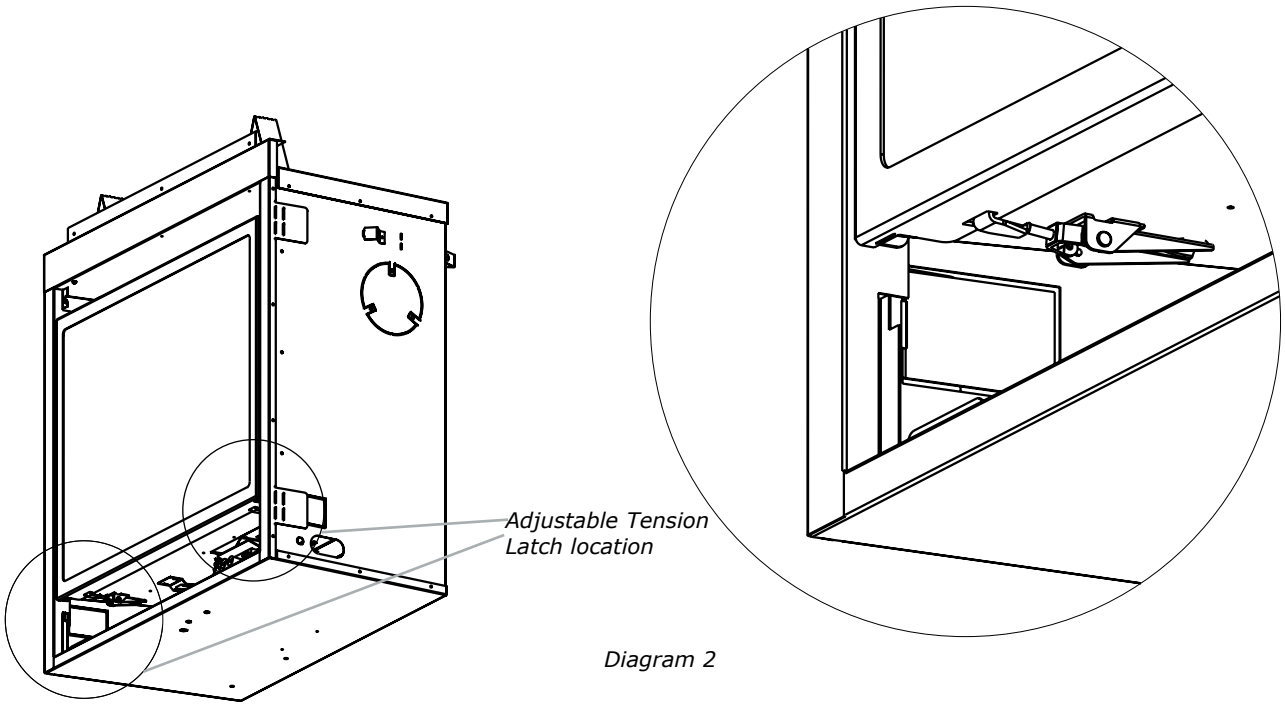

Diagram 2

Note: To remove Flush Glass door reverse Steps 1 and 2.

Vignette Frame and Safety Screen Installation

Black Chrome Handling Instructions

✱ All hand and finger marks **MUST** be cleaned off with a soft cloth. Use an ammonia based cleaner (ie. glass cleaner) to remove any finger prints before applying heat to the unit. Use supplied gloves when installing Black Chrome Faceplates.
Failure to do this will result in burn stains on panels which you will be unable to remove. Not protected by product warranty.

Note: If installing the optional 3 sided finishing trim you must install it prior to the installation of the accent trim

1. Line up 4 hooks on Vignette Frame with tabs on firebox located between the outer and inner firebox- hook frame on securely.

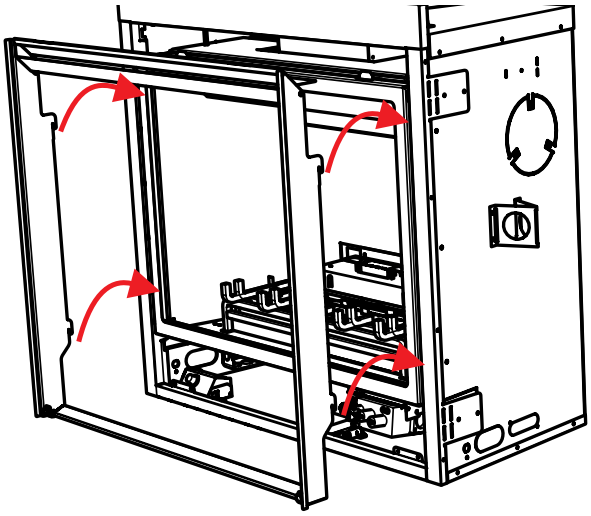

2. Line up tabs on mesh assembly with slots in outer frame and lower gently into place. Bring bottom of the mesh assembly toward the front of the appliance until it comes in contact with the magnets

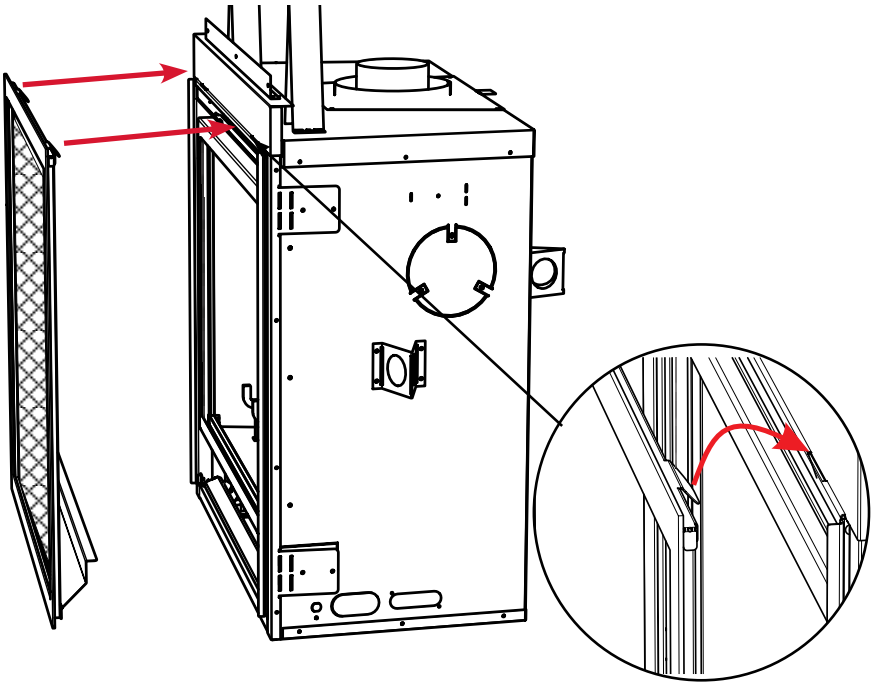

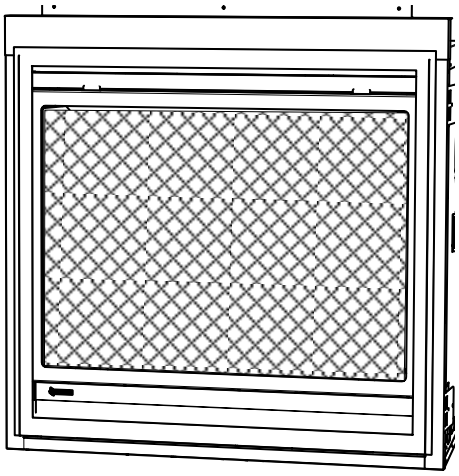

3. To remove reverse steps

Optional Vignette Inlay Installation

NOTE: Inlay not exactly as shown below.

1. Remove Inner Vignette Frame from unit if already installed.

2. Line up the inlay top bracket in the space between the safety screen frame and Vignette Frame. Slide the Inlay bracket up until it rests on the inside edge of the Vignette Frame.

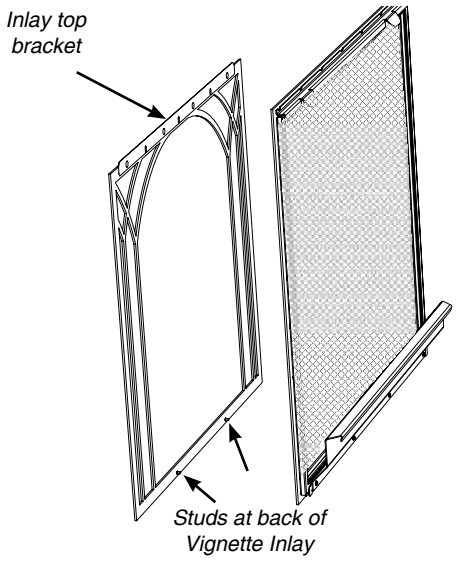

3. Position the Inlay so it is exactly centered from side to side and top to bottom within the Inner Vignette Frame.

4. With the top of the Inlay in correct position–push the studs at the bottom of the Inlay through the actual screen.

NOTE: Ensure Inlay is in correct position before pushing studs through the safety screen.

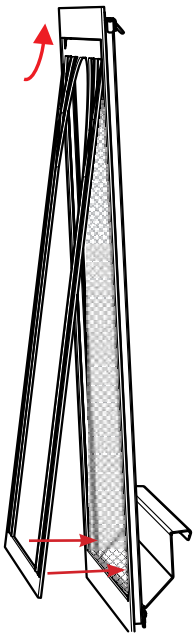

Line up Inlay–Push studs on Inlay through screen

5. Secure the Inlay in position with supplied brackets, washers, and nuts as shown.

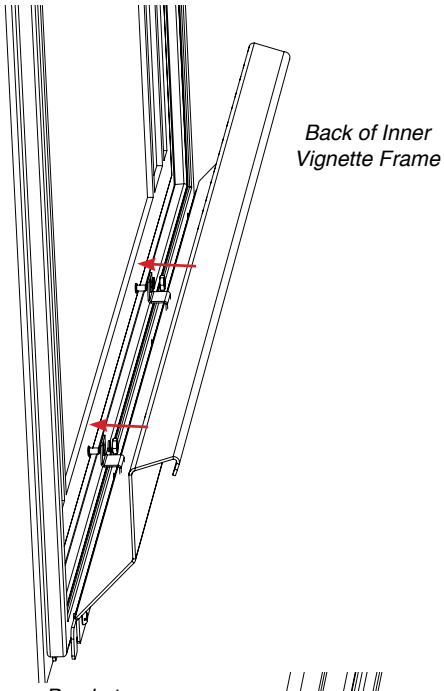

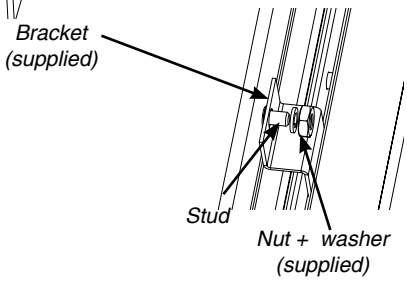

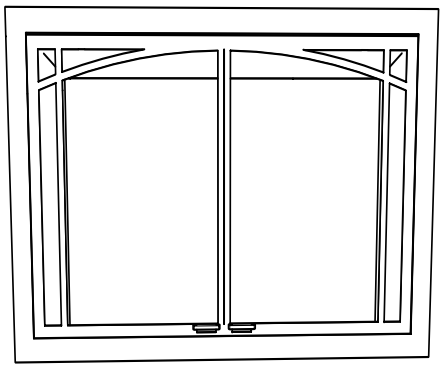

Completed Install

Optional Vignette Finishing Trim Installation

***If finishing the unit with the Vignette Finishing Trim** - remove top nailing strip from unit if installed–use nailing strip supplied with top trim piece. Side nailing strips are bent around side trim piece in flush finish application.

NOTE: Remove the safety screen, Vignette Faceplate and glass door prior to installing the Finishing Trim.

1. Install the Finishing Trim sides as shown in the diagram, line up the holes in the side trim with the holes in the firebox side.

2. Secure with 2 screws each side.

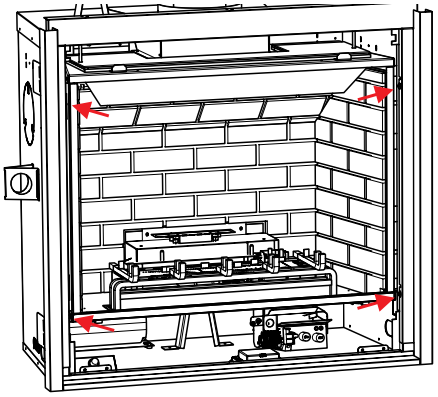

3. Loosen the 3 screws in the top inside edge of the firebox.

4. Slide the Finishing Trim Top over the Side Trim pieces and fit the bottom bracket slots over the screws. Tighten the 3 screws to secure.

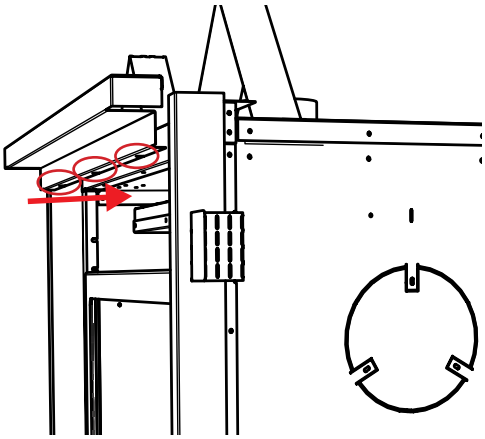

5. Hook Vignette Faceplate brackets into place.

6. Line up the screw holes on the finishing trim and Vignette Faceplate bracket with the unit–fasten with 2 screws on each side.

7. Install the lower finishing trim (if required)–secure with four screws.

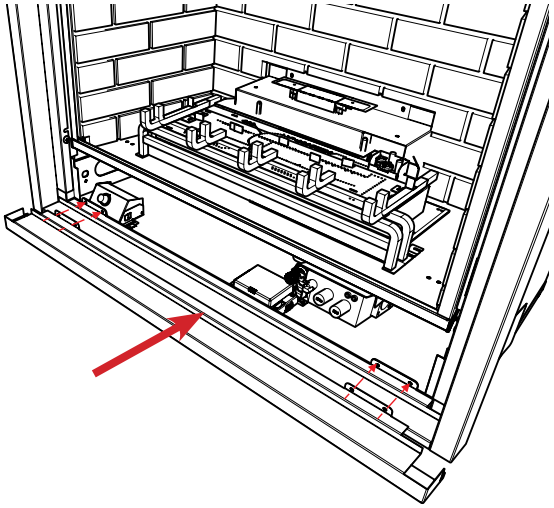

8. Hook Vignette Faceplate brackets into place (see specific instructions in unit manual).

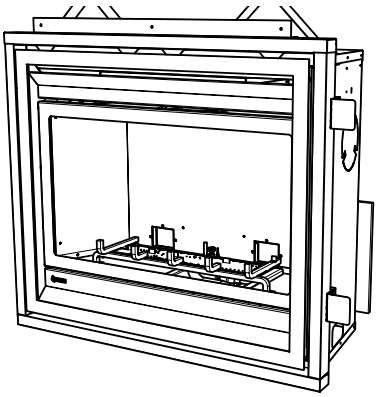

Completed install

Premium Flush Front Installation - must be used with Safety Screen Part #578-929

To install the top and bottom Flush Panels:

1. Locate the tabs on Flush Panels.
2. Line up the tabs on Flush Panels with the brackets on the unit.
3. Hook the tabs up over the brackets to attach.
4. Install Top Panel first as clearance is restricted once safety screen is in place.
5. Install the bottom panel to complete the installation.

Tabs on Flush Panel

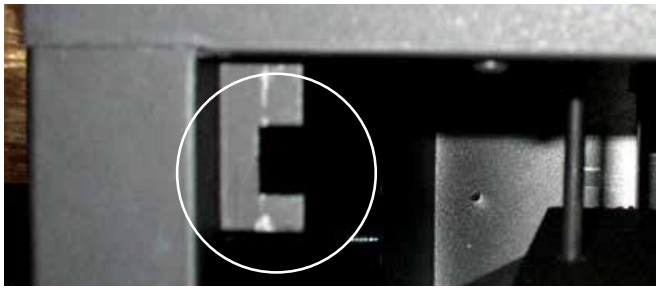

Bracket on unit for upper Flush Panel

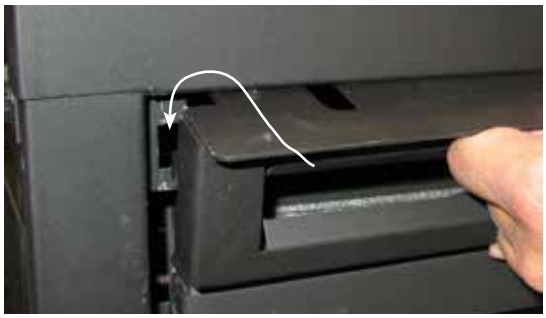

Installation of upper Flush Panel

Bracket on unit for lower Flush Panel

Installation of lower Flush Panel

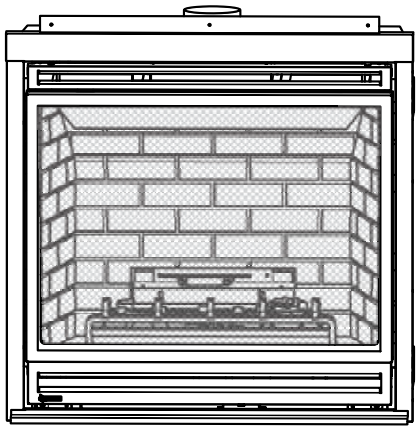

Completed Install (shown with screen)

Safety Screen Installation - must be used with Premium Flush Front

1. Hook the safety screen frame onto brackets within the unit in locations shown below.
2. Gently lower screen on to glass door frame–two (2) magnets located on inside lower part of the screen frame will secur the screen to the glass door frame.
3. To remove–reverse steps.

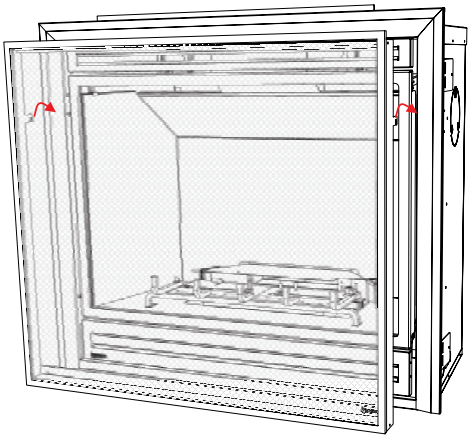

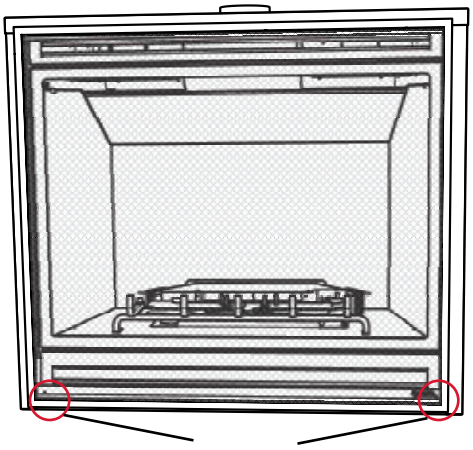

Magnet locations

Optional 3 Sided Finishing Trim Installation

1) Install the Finishing Trim sides as shown in the diagram; line up the holes in the side trim with the holes in the firebox side.
2) Secure with 2 screws per side.
3) Loosen the 3 screws in the top inside edge of the firebox.
4) Slide the Finishing Trim Top over the Side Trim pieces and fit the bottom bracket slots over the screws. Tighten the 2 screws to secure in place.

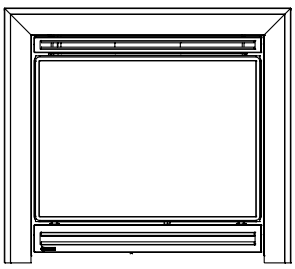

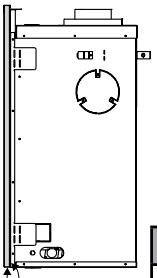

	B41XTE	B36XTE
W	43-3/8"	40-1/2"
H	37-5/8"	35-3/4"

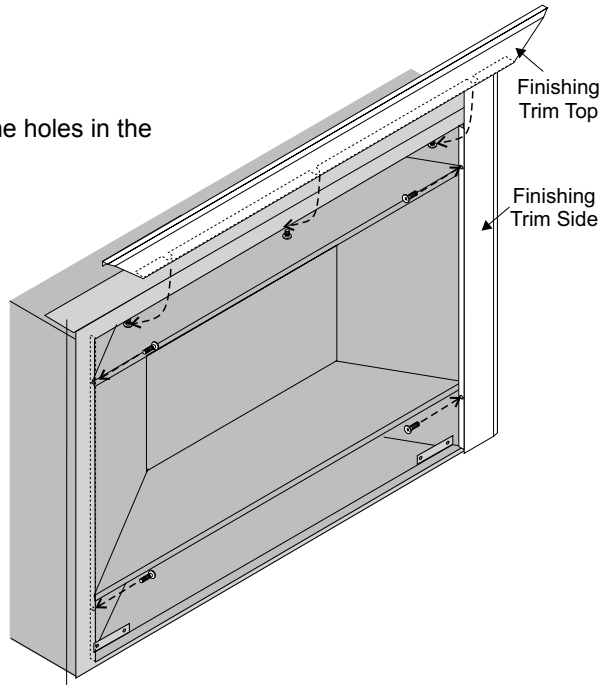

Operating Instructions

1. Read and understand these instructions before operating this appliance.
2. Check to see that all wiring is correct and enclosed to prevent possible shock.
3. Check to ensure there are no gas leaks.
4. Make sure the glass in the glass door frame is properly positioned. Never operate the appliance with the glass removed.
5. Verify that the venting and cap are unobstructed.
6. The unit should never be turned off, and on again without a minimum of a 60 second wait.

First Fire

The **FIRST FIRE** in your heater is part of the paint curing process. To ensure the paint is properly cured, it is recommended you burn your fireplace for at least four (4) hours the first time.

When first operated, the unit will release an odour caused by the curing of the paint and the burning off of any oils remaining from manufacturing. Smoke detectors in the house may go off at this time. Open a few windows to ventilate the room for a couple of hours. The glass may require cleaning.

NOTE: When the glass is cold and the appliance is lit, it may cause condensation and fog the glass. This condensation is normal and will disappear in a few minutes as the glass heats up.

DO NOT ATTEMPT TO CLEAN THE GLASS WHILE IT IS STILL *HOT*!

DO NOT BURN THE UNIT WITHOUT THE GLASS DOOR IN PLACE.

During the first few fires, a white film may develop on the glass front as part of the curing process. The glass should be cleaned after the unit has cooled down or the film will bake on and become very difficult to remove. Use a non-abrasive cleaner and DO NOT ATTEMPT TO CLEAN THE GLASS WHILE IT IS HOT.

Normal Operating Sounds of Gas Appliances

It is possible that you will hear some sounds from your gas appliance. This is perfectly normal due to the fact that there are various gauges and types of steel used within your appliance. Listed below are some examples. All are **normal operating sounds** and should not be considered as defects in your appliance.

Burner Tray:
The burner tray is positioned directly under the burner and is made of a different gauge material from the rest of the firebox and body. Therefore, the varying thicknesses of steel will expand and contract at slightly different rates which can cause "ticking" and "cracking" sounds. You should also be aware that as there are temperature changes within the unit these sounds will likely re-occur. Again, this is normal for steel fireboxes.

Pilot Flame:
While the pilot flame is on it can make a very slight "whisper" sound.

Gas Control Valve:
As the gas control valve turns ON and OFF, a dull clicking sound may be audible, this is normal operation of a gas regulator or valve.

Unit Body/Firebox:
Different types and thicknesses of steel will expand and contract at different rates resulting in some "cracking" and "ticking" sounds will be heard throughout the cycling process.

Blower Thermodisc:
When this thermally activated switch turns ON it will create a small "clicking" sound. This is the switch contacts closing and is normal.

Lighting Procedure

IMPORTANT: The remote control system supplied with this appliance has several options for starting/operating the appliance using the power button and ON/OFF key on the hand held transmitter.
Prior to operating this appliance, please read the remote control operating instructions (packaged with remote control) to understand how to operate this remote control system. Option to download remote functions video with QR code below.

Proflame Video

1. Ensure the wall switch/receiver is in the remote position. (see Diagram 1).

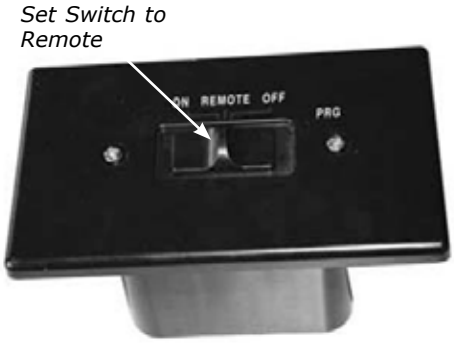

Diagram 1

2. Press and release the ON/OFF button on the remote handheld transmitter (see Diagram 2). An audible beep should be heard from the receiver.

Diagram 2
Remote shown in Manual Mode on Hi

3. After approximately 4 seconds the spark ignition system will spark for 60 seconds to light the pilot.

4. The unit will turn on.

Note: The first try for ignition will last approximately 60 seconds. If there is no flame ignition (rectification) the board will stop sparking for approximately 35 seconds. After wait time , the board will start second try for ignition by sparking for approximately 60 seconds . If there is still no positive ignition the board will go into lock out.

The system will need to be reset as follows:

a) Turn the system off using ON/OFF switch or press ON/OFF button - if using optional remote.
b) After approximately 2 seconds turn on ON/OFF switch or press ON/OFF button if using optional remote.
c) Repeat step 2.

Shutdown Procedure

1. Turn the wall mounted switch or remote to the "OFF" position.

2. If service is to be performed- you must disconnect power and shut off gas to the unit.

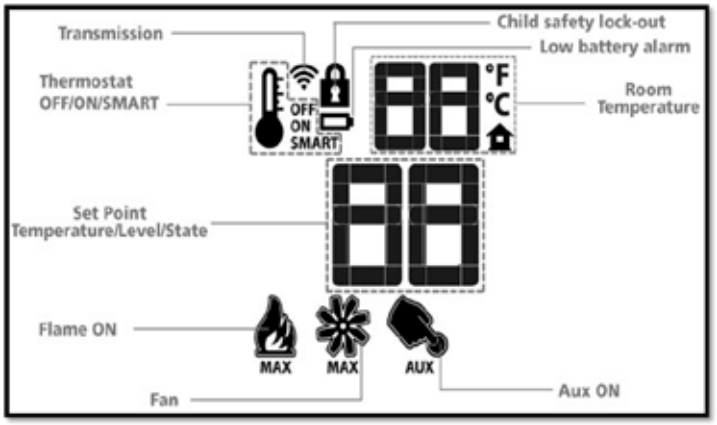

Copy of Lighting Plate Instructions

FOR YOUR SAFETY READ BEFORE LIGHTING
POUR VOTRE SÉCURITÉ – À LIRE AVANT LA MISE EN MARCHE

WARNING: If you do not follow these instructions exactly, a fire or explosion may result causing property damage, personal injury or loss of life. Improper installation, adjustment, alteration, service or maintenance can cause injury or property damage. Refer to the owner's information manual provided with this appliance. For assistance or additional information consult a qualified installer, service agency or gas supplier.

AVERTISSEMENT : Quiconque ne respecte pas scrupuleusement les instructions de la présente notice risque de déclencher un incendie ou une explosion pouvant entraîner des dégâts matériels ou des blessures pouvant être mortelles.
Tout défaut d'installation, de réglage, de modification, de service ou d'entretien peut entraîner des blessures ou des dommages matériels. Reportez-vous au manuel d'utilisation fourni avec cet équipement. Pour obtenir de l'aide ou des informations complémentaires, consulter un installateur ou un service d'entretien qualifié, ou le fournisseur de gaz.

A) This appliance is equipped with an ignition device which automatically lights the pilot.
Do not try to light the pilot by hand.
B) BEFORE OPERATING smell all around the appliance area for gas. Be sure to smell next to the floor because some gas is heavier than air and will settle on the floor.
WHAT TO DO IF YOU SMELL GAS
- Do not try to light any appliance.
- Do not touch any electric switch, do not use any phone in your building.
- Leave the building immediately.
- Immediately call your gas supplier from a neighbours phone. Follow the gas supplier's instructions.
- If you cannot reach your gas supplier, call the fire department.

C) Do not use this appliance if any part has been under water. Immediately call a qualified service technician to inspect the appliance and to replace any part of the control system and any gas control which has been underwater.

A) Cet appareil est muni d'un dispositif d'allumage qui allume automatiquement la veilleuse.
Ne tentez pas d'allumer la veilleuse manuellement.
B) AVANT LA MISE EN MARCHE, reniflez tout autour de l'appareil pour déceler une odeur de gaz. Reniflez au niveau du plancher, car certains gaz sont plus lourds que l'air et peuvent s'accumuler au niveau du sol.
QUE FAIRE SI VOUS SENTEZ UNE ODEUR DE GAZ :
- Ne tentez pas d'allumer l'appareil
- Ne touchez à aucun interrupteur; n'utilisez pas le téléphone se trouvant dans le bâtiment.
- Quittez immédiatement le bâtiment.
- Appelez immédiatement votre fournisseur de gaz depuis un téléphone extérieur. Suivez les instructions du fournisseur.
- Si vous ne pouvez pas rejoindre le fournisseur, appelez le service incendie.

C) N'utilisez pas cet appareil s'il a été plongé dans l'eau, même partiellement. Faites inspecter l'appareil par un technicien qualifié et remplacez tout élément du système de contrôle ou de commande qui a été plongé dans l'eau.

CAUTION: Hot while in operation. Do not touch. Severe burns may result. Due to high surface temperatures keep children, clothing and furniture, gasoline and other liquids having flammable vapors away. Keep burner and control compartment clean. See installation and operating instructions accompanying appliance.

ATTENTION : Surfaces chaudes lorsque l'appareil est en marche. Ne pas toucher. Risque de brûlures graves. En raison des températures élevées, les enfants, les vêtements et le mobilier, le carburant et tout autre liquide aux vapeurs inflammables doivent être tenus éloignés de l'appareil. Nettoyer régulièrement le brûleur et le compartiment des commandes. Voir les consignes d'installation et d'utilisation fournies avec l'appareil.

OPERATING INSTRUCTIONS / CONSIGNES DE FONCTIONNEMENT

1) STOP! Read the safety information above on this label.
2) Ensure the Main switch is in the ON position and/or the wall mounted battery holder (if equipped) is in the <REMOTE> position.
3) Press and release the ON/OFF button on the remote handheld transmitter. An audible beep should be heard from the receiver. If not using the remote, the unit can also be turned on by sliding the battery holder switch to the <ON> position (if equipped).
4) After approximately 4 seconds the spark ignition system will spark for 60 seconds to light the main burner.
5) The unit will turn on.
Note: The first attempt to ignition will last approximately 60 seconds. If there is no flame ignition (rectification) the board will stop sparking for approximately 35 seconds. After this wait time, the board will start a second try for ignition by sparking for approximately 60 seconds. If there is still no positive ignition after the second attempt the board will go into lock out.
The system will need to be reset as follows (after going into lock out mode):
a) Wait 5 minutes - turn the system off by pressing the ON/OFF button on the remote.
b) After approximately 2 seconds press the ON/OFF button again.
c) Unit will repeat step 2.
6) If the appliance will not operate, follow the instructions, "To Turn Off Gas to Appliance" and call your service technician or gas supplier.
This appliance is equipped with an on-demand pilot that shuts off after seven days.

1) STOP! Lisez les instructions de sécurité sur la portion supérieure de cette étiquette.
2) S'assurer que le commutateur principal est en position ON et/ou que le bloc-piles mural (le cas échéant) est en position <REMOTE>.
3) Appuyer sur la touche ON/OFF de la télécommande puis relâcher. Un bip sonore retentira depuis le récepteur. Si vous n'utilisez pas la télécommande, l'appareil peut également être allumé en faisant glisser le commutateur du bloc-piles sur la position <ON> (le cas échéant).
4) Après environ 4 secondes, le système d'allumage produira une étincelle pendant 60 secondes pour allumer le brûleur principal.
5) L'appareil s'allumera.
Remarque : Au premier allumage, le système tente d'allumer les flammes pendant 60 secondes. Si l'essai est infructueux, le système fera une pause de 35 secondes. C'est ce qu'on appelle l'étape de rectification. Ce délai écoulé, le système tente à nouveau d'allumer les flammes en produisant des étincelles pendant 60 secondes. Si les flammes ne s'allument toujours pas, le système se met en mode verrouillage.
Il faut alors le réinitialiser en suivant les étapes ci-dessous (pour le déverrouiller) :
a) Attendre 5 minutes et éteindre l'appareil en appuyant sur la touche ON/OFF de la télécommande.
b) Attendre 2 secondes et appuyer encore une fois sur la touche ON/OFF.
c) L'appareil répètera l'étape 2.
6) Si l'appareil ne fonctionne pas, suivez les instructions "Pour couper le gaz au niveau de l'appareil" et appelez un technicien qualifié ou votre fournisseur de gaz.
Cet appareil est équipé d'une veilleuse sur demande qui s'éteint après sept jours.

TO TURN OFF GAS TO APPLIANCE / POUR COUPER LE GAZ AU NIVEAU DE L'APPAREIL

1) Press the ON/OFF button on the remote or slide the wall mount switch to the "OFF" position.
2) If service is to be performed–you must disconnect power and shut off gas to the unit.
1) Appuyer sur la touche ON/OFF de la télécommande ou faites glisser l'interrupteur mural sur la position "OFF".
2) Lors de l'entretien de l'appareil, vous devez débrancher l'alimentation électrique et couper le gaz alimentant l'appareil.

DO NOT REMOVE THIS INSTRUCTION PLATE
NE PAS ENLEVER CETTE ÉTIQUETTE D'INSTRUCTIONS

919-649b

Maintenance Instructions

1. Always turn off the gas valve before cleaning. For relighting, refer to lighting instructions. Keep the burner and control compartment clean by brushing and vacuuming at least once a year. When cleaning the logs, use a soft clean paint brush as the logs are fragile and easily damaged.

2. Clean appliance and door with a damp cloth (never when unit is hot). Never use an abrasive cleaner. The glass should be cleaned with a gas fireplace glass cleaner. ***The glass should be cleaned when it starts looking cloudy.***

3. The heater is finished in a heat resistant paint and should only be refinished with heat resistant paint. Regency® uses StoveBright Paint - Metallic Black #6309.

4. Make a periodic check of burner for proper position and condition. Visually check the flame of the burner periodically, making sure the flames are steady; not lifting or floating. If there is a problem, call a qualified service person.

5. The appliance and venting system must be inspected before use, and at least annually, by a qualified field service person, to ensure that the flow of combustion and ventilation air is not obstructed.

Note: Never operate the appliance without the glass properly secured in place.

6. Do not use this appliance if any part has been under water. Immediately call a qualified service technician to inspect the appliance and to replace any part of the control system and any gas control which has been under water.

7. In the event this appliance has been serviced check that the vent-air system has been properly resealed & reinstalled in accordance with the manufacturer's instructions.

8. Verify operation after servicing.

General Vent Maintenance

Conduct an inspection of the venting system semi-annually. Recommended areas to inspect as follows:

1. Check the Venting System for corrosion in areas that are exposed to the elements. These will appear as rust spots or streaks, and in extreme cases, holes. These components should be replaced immediately.
2. Remove the Cap, and shine a flashlight down the Vent. Remove any bird nests, or other foreign material.
3. Check for evidences of excessive condensation, such as water droplets forming in the inner liner, and subsequently dripping out the joints, Continuous condensation can cause corrosion of caps, pipe, and fittings. It may be caused by having excessive lateral runs, too many elbows, and exterior portions of the system being exposed to cold weather.

4. Inspect joints, to verify that no pipe sections or fittings have been disturbed, and consequently loosened. Also check mechanical supports such as Wall Straps, or plumbers' tape for rigidity.

Log Replacement

The unit should never be used with broken logs. Turn off the gas valve and allow the unit to cool before opening door and carefully remove the logs. (The pilot light generates enough heat to burn someone.) If for any reason a log should need replacement, you must use the proper replacement log. The position of these logs must be as shown in the Diagrams under Log Installation.

Note: Improper positioning of logs may create carbon build-up and will severely alter the unit's performance which is not covered under warranty.

Glass Gasket

If the glass gasket requires replacement use a tadpole glass gasket (Part # 846-683).

Door Glass

Your Regency® fireplace is supplied with high temperature 5mm-Ceramic glass. If your glass requires cleaning, we recommend using an approved glass cleaner available at all authorized dealers. Do not use abrasive materials.

CAUTION & WARNINGS:

* Do not clean when the glass is hot.
* The use of substitute glass will void all product warranties.
* Care must be taken to avoid breakage of the glass.
* Do not strike or abuse the glass.
* Do not operate this fireplace without the glass front or with a cracked or broken glass front.
* Wear gloves when removing damaged or broken glass.
* Replacement of the glass panels should be done by a licensed or qualified service per son.

GLASS REPLACEMENT

In the event that you break your glass by impact, purchase your replacement from an authorized Regency dealer only. Replacement glass (Part #940-357/P) is shipped already installed into the door frame. Reinstall as per Glass Door Installation in the "Glass Door Removal" section.

Removing Valve

1. **Shut off the gas and electrical supply.**
2. Remove the safety screen and/or Flush Panels.
3. Open and remove the glass door.
4. Remove the logs.
5. Remove the burner/grate assembly by removing the 2 Phillips head screws.

Diagram 1: Remove the left and right screws.

6. Slide the burner assembly to the left to release it from the orifice, then lift it out.

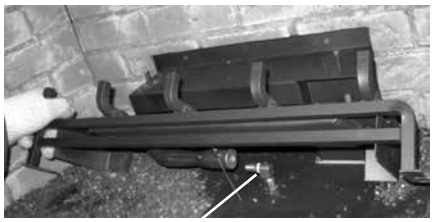

Diagram 2: Slide burner assembly to the left and then remove.

7. Remove the 2 screws securing the rear log tray and lift out. Diagram 3

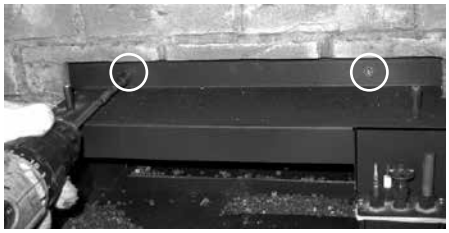

Diagram 3

8. Disconnect the inlet gas line.
9. Disconnect the EV1, EV2, and ground wires from the valve - as shown below.

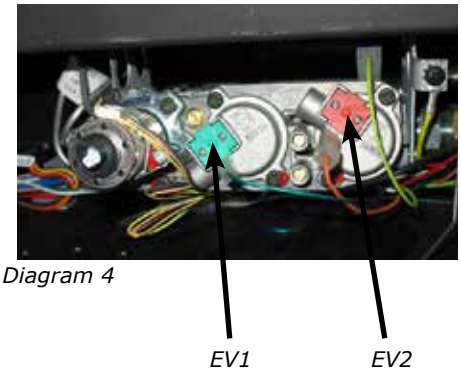

Diagram 4

10. Remove the 8 Phillips head screws securing the valve tray assembly in place (Diagram 5) and then lift the entire assembly out (Diagram 6).

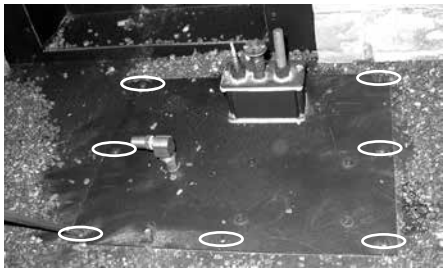

Diagram 5

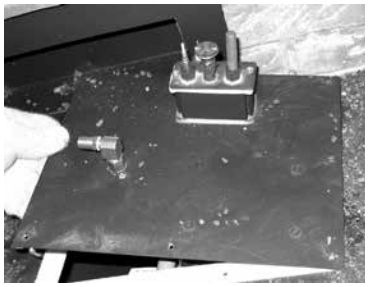

Diagram 6

Diagram 8

Installing Valve

1. Place new valve tray into position
2. Reinstall the 8 hold down screws.
3. Hook up the 2 TP and 2 TH wires to the appropriate connections on the valve.
4. Reinstall the rear log tray.
5. Install burner/grate assembly.
6. Hook up the gas line and check for gas leaks with a soap and water solution or a gas leak detector. (Do not use open flame for leak testing.)
7. Fire up the unit temporarily.
8. Check the manifold pressure.
9. Reinstall the logs and brick panels as needed.
10. Reinstall the door and replace the Flush Panels.
11. Fire up the unit again and check for proper flame appearance and glow on logs.

Gas Maintenance

In order for your Regency appliance to continue to provide comfort to your home periodic maintenance must be performed to ensure it is operating at peak efficiency. The items in the list should be checked by a licensed gas service technician during the annual service check. Your unit may require more frequent maintenance checks if you notice any changes in how it operates. Operational changes to look for can include, but are not limited to, extended start up time, increased fan noise, residue/carbon build up, white build up on the glass/firebox, increased operating noise etc. Should any of these or other conditions arise, discontinue use and schedule a service check with your local licensed gas technician. The list below shows items your licensed service technician will need to check and service at least annually.

Clean

- Glass
- Interior bricks / panels
- Burner ports & burner air shutter
- Fan blades
- Log set
- Pilot orifices
- Pilot hood (change as needed)
- Flame sensor (electronic ignition models)
- Flame electrode
- Burner orifice
- Thermocouple (millivolt models)
- Thermopile (millivolt models)

Inspect

- Pilot assembly
- Burner
- Pressure relief gaskets/doors
- Flue connector gasket if present
- Door seal
- Firebox
- Venting
- Batteries (remote handheld, remote receiver, DC sparker, change as needed)
- Burner media (change as needed)
- Air shutter setting
- Wiring

Check

- Voltage on thermocouple/thermopile (millivolt models)
- Ohms reading on flame sense (electronic ignition models)
- Inlet/outlet fuel pressures as per rating plate
- Voltage/ohms readings on gas valve
- Ohms reading to on/off switch circuit (Millivolt models)

Gas Leak Tests

- Check main gas line connection to valve
- Check shut off valve connections
- Check connection at gas valve outlet
- Check connection at main burner orifice
- Check pilot fuel line at valve and at pilot assembly

Main Assembly

	Part #	Description
1)	576-084F	Top Insulation Plate
2)	576-099	Top Insulation
3)	556-524	Flue Collar Outer Assembly
4)	556-095	Flue Collar Gasket
5)	556-097	Exhaust Gasket
6)	556-513	Flue Collar Inner Assembly
7)	556-088F	Top Relief Plate
8)	556-094	Relief Gasket - Door Top
9)	576-901	Brick Panel - Standard Brown
	576-902	Brick Panel - Standard Red
	576-904	Brick Panel - Castle Stone
	576-908	Black Enamel Panels
10)	820-389	Thermodisc Bracket
12)	948-165	Adjustable Tension Latch
13)	904-731	Capscrew 1/4 - 20 x 3.5 NC Gr5
14)	940-357/P	Ceramic Glass
15)	556-012	Door Frame
16)	*	Outerbox Assembly
17)	*	Firebox Assembly

	Part #	Description
18)	578-917	Fan Assembly
19)	910-215/P	Fan Motor (120 Volts)
20)	911-159	Power Cord (120 Volts)
23)	910-142	Thermodisc - Fan Auto ON/OFF
24)	846-683	Glass Gasket 2 1/2" Wide Tadpole Tape (11') (936-159)
25)	910-430	Receptacle Cover
26)	910-428	Receptacle
27)	910-429	Receptacle Metal Box
28)	904-687	Connector Clamp
30)	578-922	Vignette Front Platinum
	578-923	Vignette Front Black Chrome
	578-924	Vignette Front Black
	578-925	Vignette Front Tuscan Sunset
36)	920-000	Manual

* Not available as a replacement part.

Main Assembly

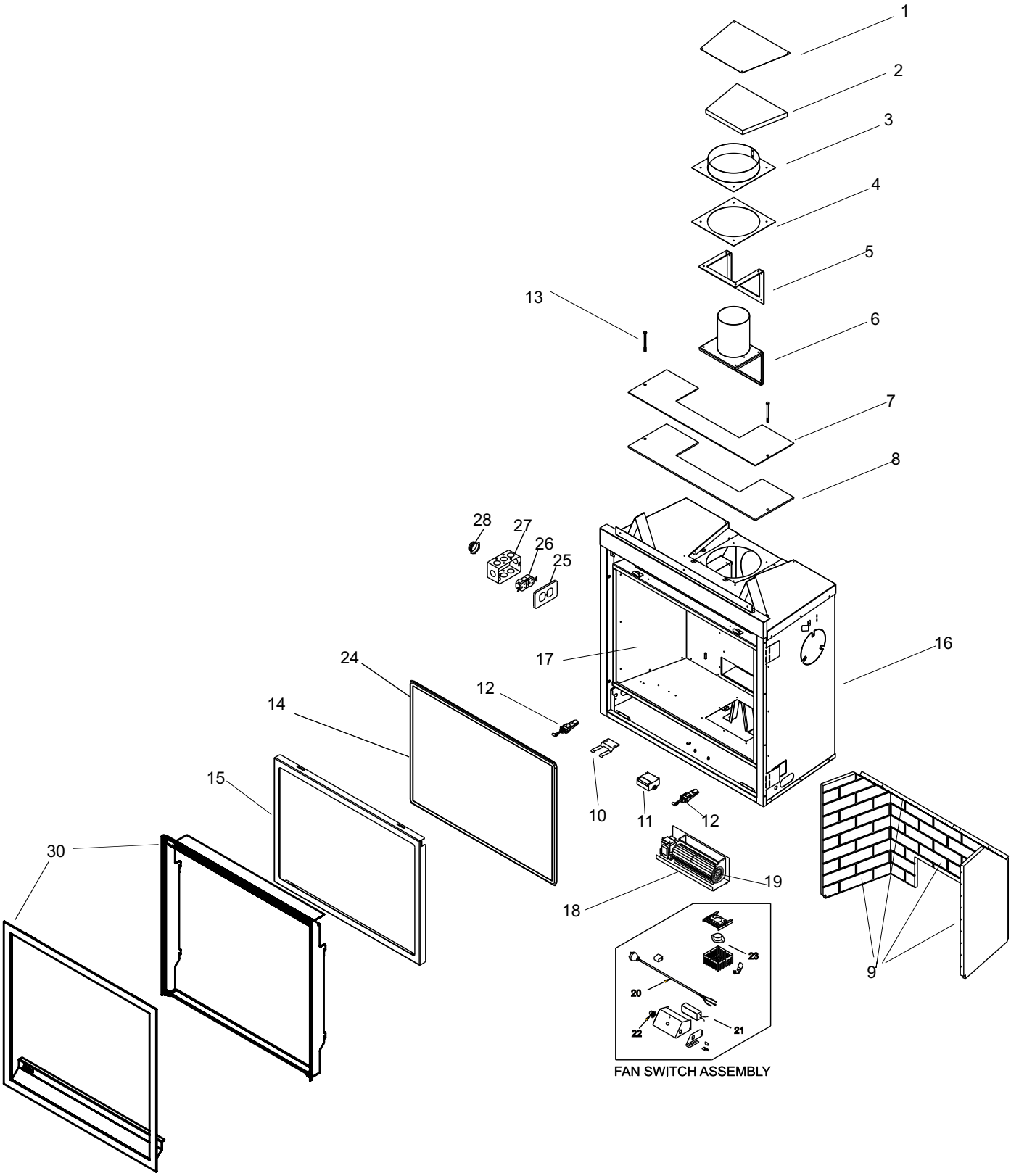

Burner Assembly

	Part #	Description
1)	576-077/P	Rear Log Tray
3)	576-525	B36XTE Burner Assembly NG/LP
4)	576-057	B36XTE Grate Assembly
5)	904-644	Orifice # 35 NG
	904-645	Orifice # 51 LP
6)	911-084	Valve NG
	911-085	Valve LP
7)	*	Valve Tray - B36XTE
9)	578-574E/P	Valve Assembly - NG
	578-776E/P	Valve Assembly - LP
10)	911-276	Pilot Assembly - NG
	911-277	Pilot Assembly - LP
10a)	W840470	Pilot Assembly Gasket
11)	911-010	Hi/Low Stepper Motor NG
11)	911-011	Hi/Low Stepper Motor LP
12)	502-061	Pilot Shield

Part #	Description
911-265	Ignition Board (DFC 0.584.622)
911-013	Wiring Harness -Switch
911-018	Battery Holder
911-037	Flame Sensor
911-038	Flame Electrode
911-039	Pilot Hood
910-432	Pilot Tube
911-338/P	Remote Receiver
911-335	Large Wall Cover Plate White
911-343	Large Wall Cover Plate Black
910-592	Remote Control GTMF hand held
911-030	Fan Control Module
910-036	Pilot Orifice - NG
910-037	Pilot Orifice - LP
946-721	AC Adaptor
*578-930	Log Set (Complete)
911-137	Pilot Hood Clip

*** Not shown here**

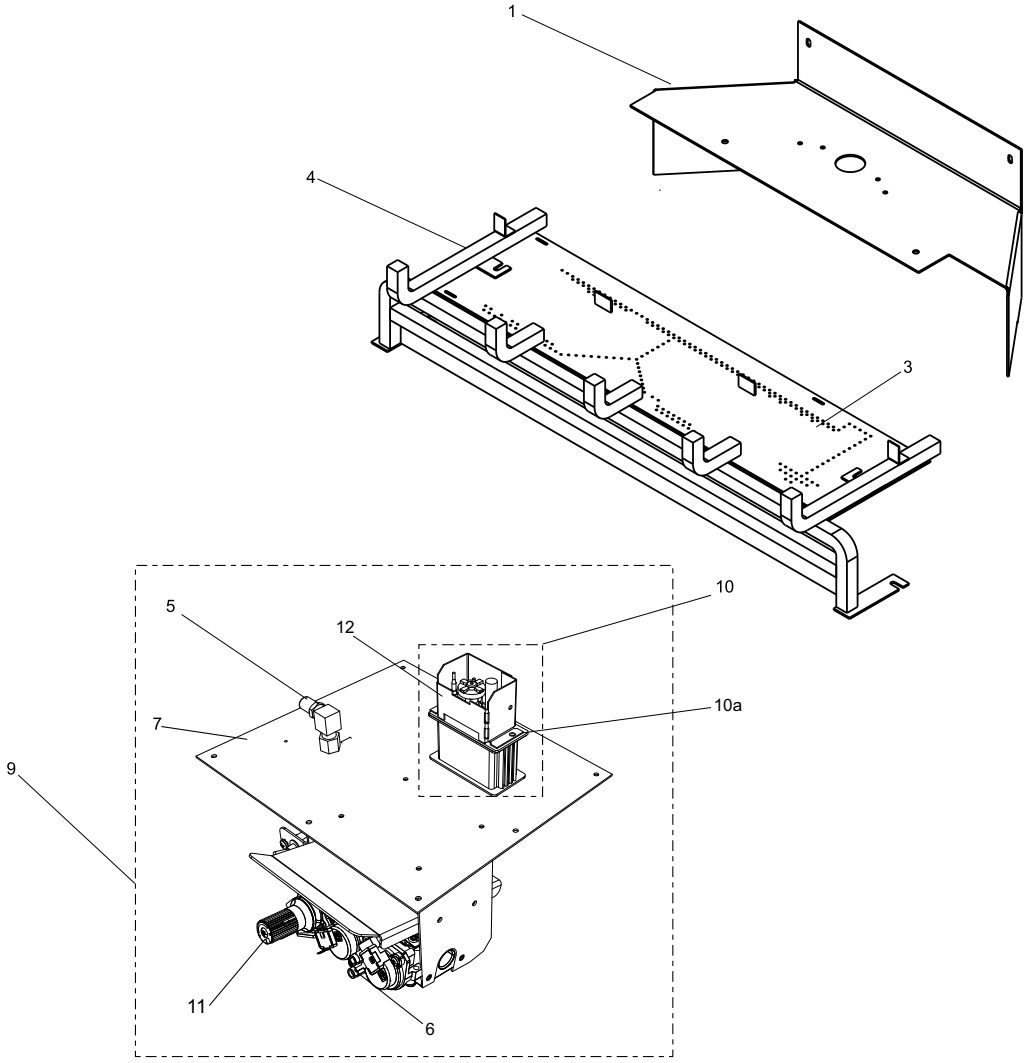

Optional Accessories

	Part #	Description
1	576-916	Flush Panels
2	578-929	Safety Screen (for use with flush panels only)
3	578-928	Vignette Trim
4	578-918	Vignette Inlay Chrome
	578-919	Vignette Inlay Black
	578-920	Vignette Inlay Sunset
	578-917	Fan Assembly Complete
	578-922	Vignette Front Platinum
	578-923	Vignette Front Black Chrome
	578-924	Vignette Front Black
	578-926	Vignette Front Tuscan Sunset
	578-928	Vignette Finishing Trim
	578-977	Conversion - LP
	576-946	Finishing Trim Black 3 Sided (For Use With Flush Panels Only)

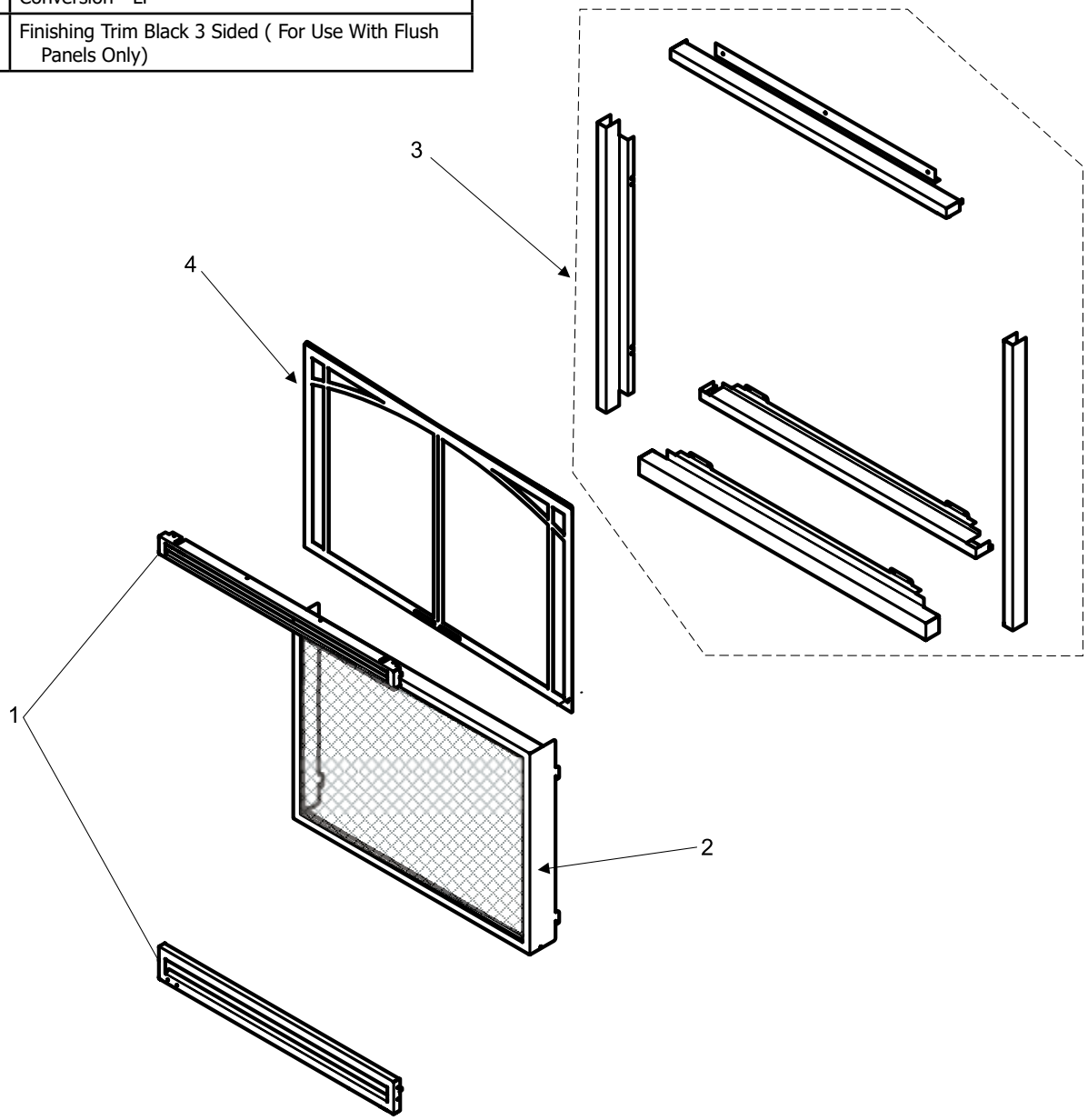

Limited Lifetime Warranty

FPI Fireplace Products International Ltd. (for Canadian customers) and Fireplace Products US, Inc. (for US customers) (collectively referred to herein as "FPI") extends this Limited Lifetime Warranty to the original purchaser of this Appliance provided the product remains in the original place of installation. The items covered by this Limited Lifetime Warranty and the period of such coverage are set forth in the table below.

An Appliance in this policy is defined as an Indoor Gas Fireplace, Indoor Gas Insert, Indoor Gas Freestanding Stove.

This Appliance has only been certified and listed for use indoors.**

This Limited Lifetime Warranty starts on the day the Appliance was purchased.

**Note: There are select models which are approved for both indoor/outdoor use. See specific product manuals for details.

The Limited Lifetime Warranty is not transferable, amendable or negotiable under any circumstances.

Indoor Gas Products Warranty Coverage Parts and Labor	**Limited Lifetime**	**5 years**	**2 years**	**1 year**	**Subsidized Labor Coverage* (Years)**
Firebox and Heat Exchanger	✓				3
Steel Burner Tube	✓				3
Glass Thermal breakage only	✓				3
All painted Surrounds/Inlays Finishes White/Black Chase Vents/Steel Framing Kits		✓			3
Brick Panels/Log sets/Ceramic Burners/Grates		✓			3
All Castings		✓			3
Valve assembly and all gas control components (Pilot assembly, flame sensors, Spark Electrode, Pilot Tubing, Orifices, Thermocouple, Thermopile)			✓		2
All Other Electrical components (Ignition Control Boards, Wiring, Wiring Harnesses, Lighting Wiring Assemblies, Switches, Blowers, Blower Control Module, Battery Pack, Remote Control Systems)			✓		2
Enamel Panels/Painted Steel Panels			✓		1
Venting/Venting Components			✓		1
All Stainless steel surrounds All black chrome Brushed nickel/Antique copper Faceplates/surrounds All Inner/Outer Black Glass panels				✓	1
All Firebox Media (Glass Crystals, Crushed Glass, Glass Fire beads, Volcanic, Ceramic, Spa Stones, River Pebbles, Fireballs)				✓	1
All hardware				✓	1
WIFI Dongle				✓	1
Mesh/Glass Safety Barriers				✓	1
Accent Light Bulbs				✓	1
Glass (Crazing)				✓	1

Note: Warranty coverage noted above may not be applicable as components/options vary based on appliance purchased.

Conditions:

Warranty protects against defect in manufacture or FPI factory-assembled components only, unless herein specified otherwise.

***This warranty does not cover dealer travel costs, mileage, fuel, tolls for diagnostic or service work. All labor rates paid to authorized dealers are subsidized, pre-determined rates. Dealers may charge you for travel and additional time beyond their subsidy.**

Any part(s) found to be defective during the warranty period as outlined above will be repaired or replaced at FPI's option through an accredited distributor, dealer or pre-approved and assigned agent; provided that the defective part is returned to the distributor, dealer or agent for

inspection if requested by FPI. Alternatively, FPI may, at its discretion, fully discharge all of its obligations under warranty by refunding the verified purchase price of the product to the original purchaser. The purchase price must be confirmed by the original Bill of Sale. **The authorized selling dealer, or an alternative authorized FPI dealer if pre-approved by FPI, is responsible for all in-field diagnosis and service work related to all warranty claims. FPI is not responsible for results or costs of workmanship of unauthorized FPI dealers or agents in the negligence of their service work.**

At all times, FPI reserves the right to inspect reported in the field/on location complaints of products claimed to be defective before processing or authorizing any claim. Failure to allow this upon request will void the warranty.

All warranty claims must be submitted by the dealer servicing the claim, including a copy of the Bill of Sale (proof of purchase by you). All claims must be complete and provide full details as requested by FPI to receive consideration for evaluation. **Incomplete claims may be rejected.**

Replacement Appliances to the original purchaser are limited to one per warranty term. Appliances must be installed according to all manufacturers' instructions as per the manual. All Local and National required codes must be met.

The installer is responsible for ensuring the Appliance is operating as designed at the time of installation.

The original purchaser is responsible for the annual maintenance of the Appliance, as outlined in the owner's manual. As outlined below, the warranty may be voided due to problems caused by a lack of maintenance.

Records/receipts of any maintenance completed on the appliance must be kept in case asked for when dealer submits a warranty claim.

Purchased parts: Repair/replacement parts purchased by the consumer from FPI after the original coverage has expired on the Appliance will carry a **90-day** warranty from the purchase date, valid with a receipt only. Any item shown to be defective will be repaired or replaced at our discretion. No labor coverage is included with these parts.

Special Finishes - One year on brushed nickel, black chrome and antique copper faceplates/surrounds. You can expect some changes in color as the product "ages" with constant heating and cooling. FPI warranties the product for any manufacturing defects on the original product. However, the manufacturer's warranty does not cover changing colors and marks, i.e. fingerprints, etc. applied after the purchase of the product. Damage from the use of abrasive cleaners is not covered by warranty.

If freight damage has been found either externally or internally, the dealer must be informed within 3 days. All claims as a result of damage must be submitted by the dealer servicing the claim, including a copy of the Bill of Sale (proof of purchase). All claims must be complete and provide full details as requested by FPI to receive consideration for evaluation. **Incomplete claims may be rejected.**

As this is a Limited Lifetime Warranty, if the Appliance needs to be replaced, the Appliance that was purchased at the time of sale might not be replaced with exactly the same model Appliance. In that case, FPI will replace your Appliance with one that is similar at the time of replacement under the terms of this Limited Lifetime Warranty, but ONLY in the event that an item covered by the Limited Lifetime Warranty is found to be defective. Please refer to the table on first page of this warranty for items covered by the Limited Lifetime Warranty. Product changes might be the result of the original Appliance being discontinued, changes in regulatory requirements, product advancements, etc., which are beyond the control of FPI. **This Limited Lifetime Warranty does not cover any installation costs, or costs associated with changes of required clearances for the replacement Appliance, hearth pads, mantles, facing and/or facing materials such as framing, completed walls made of drywall, wood, non-combustible board, tile, brick, stone, marble etc., venting/chimney systems, or components of the chimney system.**

If a suitable replacement is not available, FPI will refund **50%** of the purchase price of the Appliance and any applicable FPI accessories (faceplates, brick panels, media, etc.) purchased at the time of sale. **In no event will FPI refund any portion of the purchase price of, or reimburse costs associated with, any other items, including without limitation, installation of a new Appliance, changes of required clearances for a new Appliance, hearth pads, mantles, facing and/or facing materials such as framing, completed walls made of drywall, wood, non- combustible board, tile, brick, stone, marble etc., venting/chimney systems, or components of the chimney system. A copy of the receipt or bill of sale will be necessary to validate the purchase price.**

For appliances approved for both Indoor/Outdoor use:

Optional finishing trims and faceplate's may be used in the outdoor environment. Plated faceplates are not recommended for outdoor installation due to the high potential for oxidation to form on the surface. However, please note that some fading or corrosion will occur due to environmental exposure. This would also apply to the gas appliance. Rust/corrosion is not covered under the terms of the warranty policy.

Fan kits may be installed but are not recommended in areas where there is high humidity. The appliance must be vented the same as if installed indoors. Follow the same guidelines/venting parameters when this is installed outdoors. Horizontal termination caps must not discharge into the same space shared by the front of the appliance. Vertical termination caps are recommended.

Appliances approved for use outdoors must be installed in a weatherproof enclosure while still following all clearance to combustible materials as outlined in the appliance manual.

Exclusions:

This Limited Lifetime Warranty does not extend to paint, rust or corrosion of any kind due to a lack of maintenance or improper venting, combustion air provision, corrosive chemicals (i.e. chlorine, salt, air, etc.), door, valve, pilot, fan cover, pressure relief door or glass gasketing, batteries, color fading, carbon/sooting of the log sets due to use and does not cover lava rock, platinum/glowing embers, andiron black embers, vermiculite.

Malfunction, damage or performance-based issues as a result of environmental conditions, location, chemical damages, downdrafts, installation error, an installation by an unqualified installer, incorrect chimney components (including but not limited to cap size or type), operator error, abuse, misuse, use of improper fuels, lack of regular maintenance and upkeep, acts of God, weather-related problems from hurricanes, tornados, earthquakes, floods, lightning strikes/bolts or acts of terrorism or war, which result in a malfunction of the Appliance are not covered under the terms of this Limited Lifetime Warranty.

FPI has no obligation to enhance or modify any Appliance once manufactured (i.e. as products evolve, field modifications or upgrades will not be performed on existing Appliances).

Any Appliance showing signs of neglect or misuse will not be covered under the terms of this warranty policy and may void this warranty, including Appliances with rusted or corroded fireboxes that have not been reported as rusted or corroded within **three (3)** months of installation/purchase.

Appliances which show evidence of being operated while damaged, or with problems known to the purchaser and causing further damages will void this warranty.

Appliances where the serial no. has been altered, deleted, removed or made illegible will void this warranty.

Minor movement, expansion and contraction of the steel is normal and is not covered under the terms of this warranty.

Freight damages for products or parts are not covered under the terms of the warranty.

Products made or provided by other manufacturers and used in conjunction with the FPI Appliance without prior authorization from FPI may void this warranty.

Limitations of Liability:

The original purchaser's exclusive remedy under this warranty, and FPI's sole obligation under this Limited Lifetime Warranty, express or implied, in contract or in tort, shall be limited to replacement, repair, or refund, as outlined above. IN NO EVENT WILL FPI BE LIABLE UNDER THIS WARRANTY FOR ANY INCIDENTAL OR CONSEQUENTIAL COMMERCIAL DAMAGES OR DAMAGES TO PROPERTY. TO THE EXTENT PERMITTED BY APPLICABLE LAW, FPI MAKES NO EXPRESS WARRANTIES OTHER THAN THE WARRANTY SPECIFIED HEREIN. THE DURATION OF ANY IMPLIED WARRANTY IS LIMITED TO DURATION OF THE EXPRESSED WARRANTY SPECIFIED ABOVE. IF IMPLIED WARRANTIES CANNOT BE DISCLAIMED, THEN SUCH WARRANTIES ARE LIMITED IN DURATION TO THE DURATION OF THIS WARRANTY.

Some US states do not allow limitations on how long an implied warranty lasts, or allow exclusion or limitation of incidental or consequential damages, so the above limitations or exclusions may not apply to you.

Customers located outside the US should consult their local, provincial or national legal codes for additional terms, which may apply to this warranty.

How to Obtain Warranty Service:

Customers should contact the authorized selling dealer to obtain warranty service. In the event the authorized selling dealer is unable to provide warranty service, please contact FPI by mail at the address listed below. Please include a brief description of the problem and your address, email and telephone contact information. A representative will contact you to make arrangements for an inspection and/or warranty service.

Canadian Warrantor:

FPI Fireplace Products International Ltd.

6988 Venture St. Delta, British Columbia
Canada, V4G 1H4

U.S. Warrantor:

Fireplace Products US, Inc.

PO Box 2189 PMB 125

Blaine, WA

United States, 98231

Or contact the Regency Customer Care Centre at 1-800-442-7432 (phone) / 604-946-4349 (fax) /customerservice@regency-fire.com (e-mail)

Product Registration and Customer Support:

Thank you for choosing a Regency Fireplace. Regency strives to be a world leader in the design, manufacture, and marketing of hearth products. To provide the best support for your product, we request that you complete a product registration form at http://www.regency-fire.com/Customer-Care/Warranty-Registration.aspx within **ninety (90)** days of purchase.

REGENCY
FIREPLACE PRODUCTS

Product Registration and Customer Support:

Thank you for choosing a Regency Fireplace. Regency strives to be a world leader in the design, manufacture, and marketing of hearth products. To provide the best support for your product, we request that you complete a product registration form found on our Web Site under Customer Care within ninety (90) days of purchase.

For purchases made in **CANADA or the UNITED STATES**:
http://www.regency-fire.com/Customer-Care/Warranty-Registration.aspx

For purchases made in AUSTRALIA:
http://www.regency-fire.com.au/Customer-Care/Warranty-Registration.aspx

You may also complete the warranty registration form below to register your Regency Fireplace Product and mail and/or fax it back to us, and we will register the warranty for you. It is important you provide us with all the information below in order for us to serve you better.

Warranty Registration Form (or Register online immediately at the above Web Site):

Warranty Details	
Serial Number (required):	
Purchase Date (required) (mm/dd/yyyy):	
Product Details	
Product Model (required):	
Dealer Details	
Dealer Name (required):	
Dealer Address:	
Dealer Phone #:	
Installer:	
Date Installed (mm/dd/yyyy):	
Your Contact Details (required)	
Name:	
Address:	
Phone:	
Email:	

For purchases made in CANADA:

FPI Fireplace Products International Ltd.
6988 Venture St.
Delta, British Columbia
Canada, V4G 1H4

Phone: 604-946-5155
Fax: 1-866-393-2806

For purchases made in the UNITED STATES:

Fireplace Products US, Inc.
PO Box 2189 PMB 125
Blaine, WA
United States, 98231

Phone: 604-946-5155
Fax: 1-866-393-2806

For purchases made in AUSTRALIA:

Fireplace Products Australia Pty Ltd
99 Colemans Road
Dandenong South, Vic. 3175
Australia

Phone: +61 3 9799 7277
Fax: +61 3 9799 7822

For fireplace care and tips and answers to most common questions please visit our Customer Care section on our Web Site. Please feel free to contact your selling dealer if you have any questions about your Regency product.

recycling

PRODUCT LIFE CYCLE:
By recycling your used appliances, you divert waste from your local landfills and help the environment. You also reduce the need for raw materials to manufacture new products. Contact your local municipality for appliance recycling services, local recycling programs, or appliance removal services to ensure your Regency appliance components, and packaging are properly recycled.

Installer: Please complete the following information

Dealer Name & Address: _____

_____

Installer: _____

Phone #: _____

Date Installed: _____

Serial #: _____

Regency®, Bellavista®,Surefire™, and AstroCap™ are trademarks of FPI Fireplace Products International Ltd.
© Copyright 2024, FPI Fireplace Products International Ltd. All rights reserved.

Printed in Canada