HAMPTON®

H15 Direct Vent Gas Fireplace

Owners & Installation Manual



MODELS: H15E-NG11 Natural Gas H15E-LP11 Propane

⚠ WARNING
FIRE OR EXPLOSION HAZARD
Failure to follow safety warnings exactly could result in serious injury, death, or property damage.

- Do not store or use gasoline or other flammable vapors and liquids in the vicinity of this or any other appliance.

- WHAT TO DO IF YOU SMELL GAS

- **Do not try to light any appliance.**
- **Do not touch any electrical switch: do not use any phone in your building. Leave the building immediately.**
- **Immediately call your gas supplier from a neighbour's phone. Follow the gas supplier's instructions.**
- **If you cannot reach your gas supplier, call the fire department.**

Installation and service must be performed by a qualified installer, service agency or the gas supplier.

Tested by: ETL LISTED C US Intertek

Certified to/Certifié pour: CSA 2.17-2017
ANSI Z21.88-2019
CSA 2.33-2019

Installer: Please complete the details on the back cover and leave this manual with the homeowner.
Homeowner: Please keep these instructions for future reference.

HAMPTON®
Direct Vent Freestanding Gas Stove

To the New Owner:

Congratulations!
You are the owner of a state-of-the-art Hampton® Gas Stove by FPI FIREPLACE PRODUCTS INTERNATIONAL LTD. The H15E-11 is a hand crafted appliance and has been designed to provide you with all the warmth and charm of a wood fireplace at the flick of a switch. The model H15E-11 has been approved by Warnock Hersey/Intertek for both safety and efficiency. As it also bears our own mark, it promises to provide you with economy, comfort and security for many trouble free years to follow. Please take a moment now to acquaint yourself with these instructions and the many features of your Hampton® Stove.

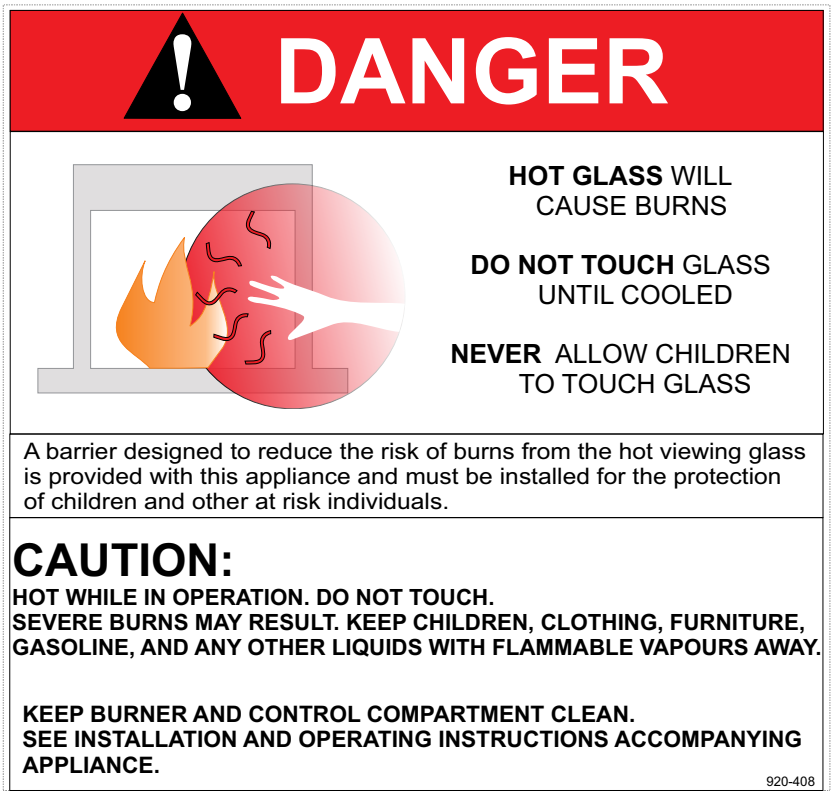

ON DEMAND PILOT LIGHT (SEVEN DAY SAFETY TIMER)

Important information if using the appliance in CPI (continuous pilot mode) only

This appliance is a ProFlame 2 system fitted with the "On Demand" Pilot, a safety feature which will shut down the gas valve completely by extinguishing the pilot light in the event of a continuous full seven days of inactivity.
This only applies if the CPI (continuous pilot) switch is in the "on" position in your remote control transmitter.
Each time the main burner shuts down, manually or through the call from the thermostat, the seven day timer starts again.
The seven day inactivity timer is controlled within the circuit board. Therefore, if in CPI mode and when the pilot light is extinguished after seven straight days of inactivity, the CPI setting on the remote control transmitter will remain in the "CPI" (continuous pilot) position. Therefore, all that is required to relight the pilot would be to press the on/off button on the remote control transmitter from "on" to "off" and back to "on". Once the pilot has re-established operation will resume as normal. There is no requirement to do anything with the IPI/CPI mode on the remote control transmitter.
If the unit never goes as long as seven full days without a call for heat, the pilot will remain lit until it is manually shut-off.
If the unit is being operated in IPI (intermittent pilot) mode, neither the above instructions nor the seven day timer will apply.

See the instructions in this manual and on the Lighting Instructions plate on the appliance to light or re-light the pilot.

Owner's Information

On Demand Pilot Light (seven day safety timer) 2
Unit Dimensions with Horizontal Vent.....4
Unit Dimensions with Vertical Vent.....5
Copy of Safety Decal 6
Decal Location 6
Important Message 10
Specifications.....10
Mobile / Manufactured Homes After First Sale 10
Before You Start.....10
Lighting Procedure 11
Shutdown Procedure 11
Copy of the Lighting Plate Instructions 12
Proflame II Remote Control Operating Instructions ...13

installer's information

Gas Installation Checklist 8
General Safety Information 17
Installation Checklist.....17
Clearances to Combustibles.....18
Locating Your Gas Stove 18
Manufactured Mobile Home Additional Requirements .18
Combustion and Ventilation Air.....18
Accent Light Bulb Install 18
Optional Fan Installation 19
Glass Front Removal / Installation 20
Venting Introduction.....21
Installation Precautions.....21
Safety Precautions for the Installer 21
Vent Restrictor Position.....21
Rotating Elbow.....21
Exterior Vent Terminal Locations.....22
4" x 6-5/8" Rigid Pipe Cross Reference Chart.....23
Rigid Pipe Venting Systems 25
Venting Arrangements 28
Vertical Termination with Co-linear Flex System 29
DV Stove Horizontal Vent Kit 30
Residential & Manufactured Homes / Mobile Homes ..32
Minimum Horizontal Termination Installations.....32
Dura-Vent Termination Kit.....33
Horizontal Terminations 34
Vertical Terminations 35
Converting Class-A Metal Chimney to
Direct Vent System 37
Cathedral Ceilings.....38
High Elevation.....38
Gas Connection 38
Aeration Adjustment.....39
Gas Pipe Pressure Testing 39
885 S.I.T. Valve Description.....39
Conversion from NG to LP.....40
Log Set Installation 41
Optional Wall Thermostat 43
Back up Battery 43
Remote/IFC Coding 43
Manual Operation (no remote) 43
Final Check.....43
Wiring Diagram without Thermostat 44
Wiring Diagram with Thermostat 45
First Fire.....46
Operating Instructions 46
Operation using an Optional Wall Thermostat.....46
Copy of the Lighting Plate Instructions 47
Normal Operating Sounds of Gas Appliances 48
Maintenance Instructions.....48
Pilot Adjustment.....48
General Vent Maintenance 49
Log Replacement 49
Glass Replacement 49
Fan Maintenance.....49
Safety Screen Replacement.....50
Accent Light Bulb Replacement 50
Valve Assembly Replacement 51
Gas Maintenance.....52
Main Assembly.....53
Burner & Log Assembly.....54

Warranty 56

Recycling 62

NATIONAL FIREPLACE INSTITUTE NFI CERTIFIED www.nficertified.org

We recommend that our products be installed and serviced by professionals who are certified in the U.S. by the National Fireplace Institute® (NFI) or in Canada by Wood Energy Technical Training (WETT).

Wood Energy Technical Training www.wettinc.ca

dimensions

UNIT DIMENSIONS WITH HORIZONTAL VENT

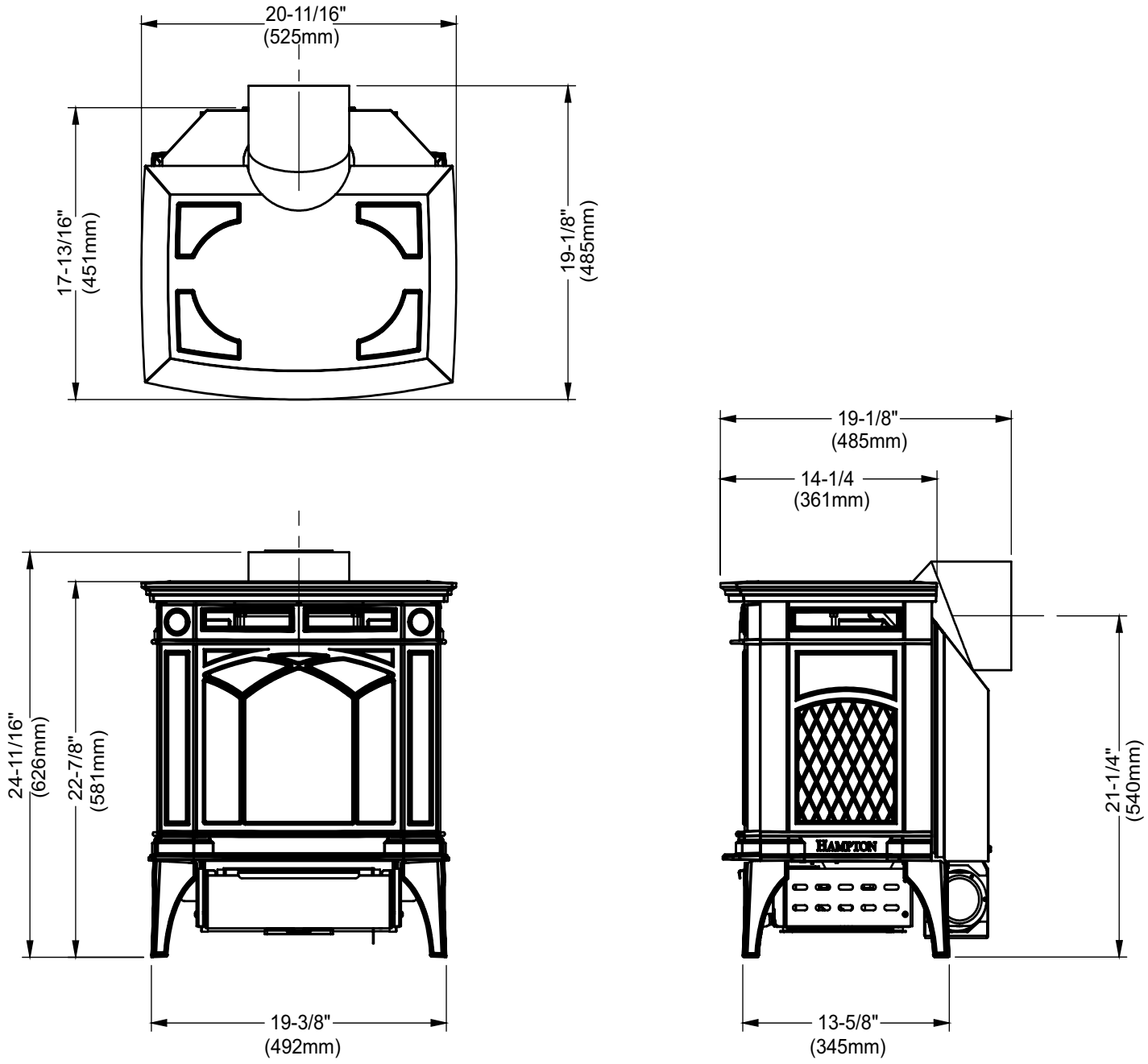

ALL PICTURES / DIAGRAMS SHOWN THROUGHOUT THIS MANUAL ARE FOR ILLUSTRATION PURPOSES ONLY. ACTUAL PRODUCT MAY VARY DUE TO PRODUCT ENHANCEMENTS.

UNIT DIMENSIONS WITH VERTICAL VENT

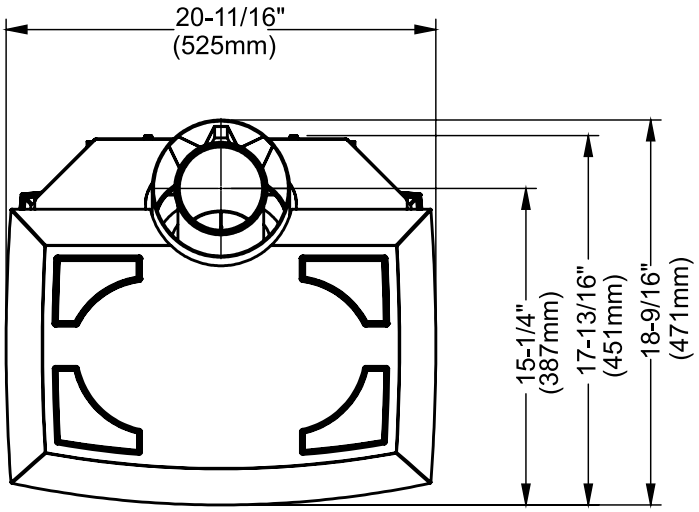

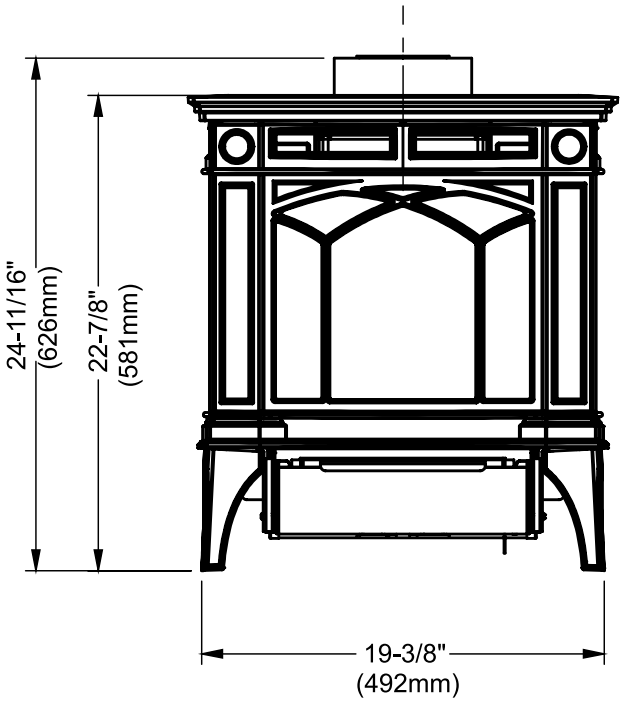

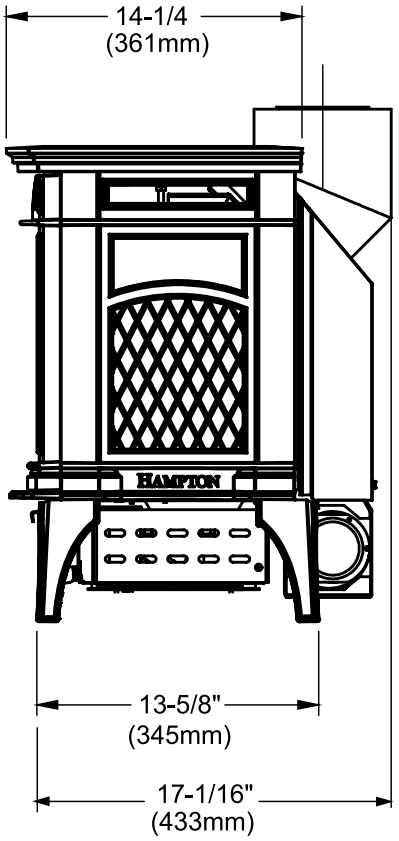

safety decal

This is a copy of the label that accompanies each Direct Vent Freestanding Gas Stove. We have printed a copy of the contents here for your review.

NOTE: Hampton® units are constantly being improved. Check the label on the unit and if there is a difference, the label on the unit is the correct one.

COPY OF SAFETY DECAL

DUPLICATE SERIAL NO. 468

Intertek C #: 4001172

Listed/Nom: VENTED GAS FIREPLACE / FOYER AU GAZ À ÉVACUATION
Certified to/Certifié : ANSI Z21.88-2019 • CSA-2.33-2019
CSA 2.17-2017
MAY BE INSTALLED IN MANUFACTURED (MOBILE) HOMES AFTER FIRST SALE.
Refer to Intertek's Directory of Building Products for detailed information.
Pour plus de détails, se reporter au Répertoire des produits de construction de Intertek.

HAMPTON™

DO NOT REMOVE THIS LABEL / NE PAS ENLEVER CETTE ÉTIQUETTE
Serial No./ No de série 468

Model/Modèle: H15E-NG11

NATURAL GAS STOVE: Model H15E-NG11

Minimum supply pressure	5" WC/C.E. (1.25 kPa)	Pression d'alimentation minimale
Manifold pressure High	3.5" WC/C.E. (0.87 kPa)	Pression manifold - élevée
Manifold pressure Low	1.6" WC/C.E. (0.40 kPa)	Pression manifold - basse
Maximum Input	18,000 Btu/h (5.28 Kw/h)	Débit calorifique maximal
Minimum Input	12,700 Btu/h (3.72 Kw/h)	Débit calorifique minimal
Orifice size	#47 DMS	Taille de l'orifice
Altitude	0-4500 ft/pi (0-1372m)	Altitude

APPAREIL FONCTIONNANT AU GAZ NATUREL
Modèle H15E-NG11

Model/Modèle: H15E-LP11

PROPANE GAS STOVE: Model H15E-LP11

Minimum supply pressure	11" WC/C.E. (2.74 kPa)	Pression d'alimentation minimale
Manifold pressure High	10" WC/C.E. (2.49 kPa)	Pression manifold - élevée
Manifold pressure Low	6.4" WC/C.E. (1.59 kPa)	Pression manifold - basse
Maximum Input	18,000 Btu/h (5.28 Kw/h)	Débit calorifique maximal
Minimum Input	15,500 Btu/h (4.54 Kw/h)	Débit calorifique minimal
Orifice size	#55 DMS	Taille de l'orifice
Altitude	0-4500 ft/pi (610-1372m)	Altitude

APPAREIL FONCTIONNANT AU PROPANE
Modèle H15E-LP11

This appliance must be installed in accordance with local codes, if any; if none, follow the National Fuel Gas Code, ANSI Z223.1, or Natural Gas and Propane Installation Code, CSA B149.1.
This appliance must be installed in accordance with the Standard CAN/CSA Z240 MH, Mobile Housing, in Canada, or with the Manufactured Home Construction and Safety Standard, Title 24 CFR, Part 3280, in the United States, or when such a standard is not applicable, ANSI/NCSBCS A225.1/NFPA 501A, Manufactured Home Installations Standard or ANSI A119.2 ou NFPA 501C Standard for Recreational Vehicles.
This appliance is only for use with the type of gas indicated on the rating plate and may be installed in an aftermarket, permanently located, manufactured (mobile) home where not prohibited by local codes. See owner's manual for details. Optional Fan Kit (Part # 382-917)
Installer l'appareil selon les codes ou règlements locaux, ou, en l'absence de tels règlements, selon les codes d'installation ANSI Z223.1, National Fuel Gas Code ou CSA-B149.1 en vigueur.
Installer l'appareil selon la norme CAN/CSA-Z240, Série MM, Maison mobiles ou CAN/CSA-Z240 VC, Véhicules de camping, ou la norme 24 CFR Part 3280, Manufactured Home Construction and Safety Standard. Si ces normes ne sont pas pertinentes, utilisez la norme ANSI/NCSBCS A225.1/NFPA 501A, Manufactured Home Installations Standard, ou ANSI A119.2 ou NFPA 501C Standard for Recreational Vehicles.
Cet appareil doit être utilisé uniquement avec le type de gaz indiqué sur la plaque signalétique. Cet appareil peut être installé dans une maison préfabriquée ou mobile (É.-U. seulement) installée à demeure si les règlements locaux le permettent. Voir la notice de l'utilisateur pour plus de renseignements. Cet appareil ne peut pas être utilisé avec d'autres gaz sauf si une trousse de conversion certifiée est fournie.

This vented gas fireplace heater is not for use with air filters. **Ne pas utiliser de filtre à air avec ce foyer au gaz à évacuation.**
For use with glass doors certified with the appliance only. À utiliser uniquement avec les portes vitrées certifiées avec l'appareil.
For Use Only with Barrier (Part # 382-005) Follow installation instructions.
Utiliser uniquement avec l'écran de sécurité (pièce n°382-005). Suivre les consignes d'installation.
VENTED GAS FIREPLACE HEATER - NOT FOR USE WITH SOLID FUELS.
FOYER AU GAZ À ÉVACUATION - NE PAS UTILISER AVEC UN COMBUSTIBLE SOLIDE.

Minimum Clearances to Combustibles / Dégagements minimaux par rapport aux matériaux combustibles

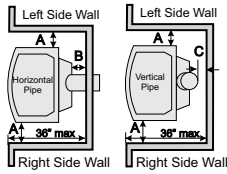

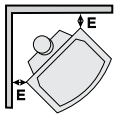

Minimum ceiling height from top of unit:24"/610mm
Hateur min plafond depuis le haut de l'appareil: 24"/610mm

A 6" / 150mm **C 2" / 50mm**
B 0" / 0mm **E 2" / 50mm**
See Manual for details / Voir manuel pour plus de détails

Minimum clearance of Vent Terminal to Outside Corner & Inside Corner: with AstroCap 6"/150mm with Dura-Vent Cap 12"/300mm

ELECTRICAL SUPPLY/ALIMENTATION ÉLECTRIQUE: 115V_60HZ less than/moins de 2 AMP

FPI Fireplace Products International Ltd.
Delta, BC, Canada
Made in Canada/Fabriqué au Canada

Intertek EPS2011169 — CANADIAN ENERGY PERFORMANCE VERIFIED / RENDEMENT ÉNERGÉTIQUE VÉRIFIÉ

CSA P.4.1 Fireplace Efficiency (FE) /Efficacité énergétique des foyers (EEF) CSA P.4.1
Natural Gas / Gaz naturel 55.33%
Propane Gas / Gaz propane 57.46%

920-089a

DECAL LOCATION

For the State of Massachusetts, installation and repair must be done by a plumber or gasfitter licensed in the Commonwealth of Massachusetts.

For the State of Massachusetts, flexible connectors shall not exceed 36 inches in length.

For the State of Massachusetts, the appliances individual manual shut-off must be a t-handle type valve.

The State of Massachusetts requires the installation of a carbon monoxide alarm in accordance with NFPA 720 and a CO alarm with battery back up in the same room where the gas appliance is installed.

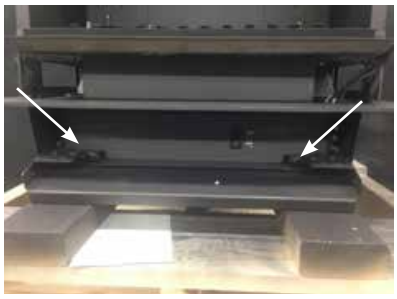



Fold down access door, and then remove two screws as shown below

With the panel removed, the gas valve will be visible. The rating plate will be attached to a black chain located under the IFC.

DO NOT REMOVE THE DECAL FROM THE UNIT.

MA Code - CO Detector
(for the State of Massachusetts only)

5.08: **Modifications to NFPA-54, Chapter 10**

(2) Revise 10.8.3 by adding the following additional requirements:

(a) For all side wall horizontally vented gas fueled equipment installed in every dwelling, building or structure used in whole or in part for residential purposes, including those owned or operated by the Commonwealth and where the side wall exhaust vent termination is less than seven (7) feet above finished grade in the area of the venting, including but not limited to decks and porches, the following requirements shall be satisfied:

1. INSTALLATION OF CARBON MONOXIDE DETECTORS. At the time of installation of the side wall horizontal vented gas fueled equipment, the installing plumber or gasfitter shall observe that a hard wired carbon monoxide detector with an alarm and battery back-up is installed on the floor level where the gas equipment is to be installed. In addition, the installing plumber or gasfitter shall observe that a battery operated or hard wired carbon monoxide detector with an alarm is installed on each additional level of the dwelling, building or structure served by the side wall horizontal vented gas fueled equipment. It shall be the responsibility of the property owner to secure the services of qualified licensed professionals for the installation of hard wired carbon monoxide detectors

a. In the event that the side wall horizontally vented gas fueled equipment is installed in a crawl space or an attic, the hard wired carbon monoxide detector with alarm and battery back-up may be installed on the next adjacent floor level.

b. In the event that the requirements of this subdivision can not be met at the time of completion of installation, the owner shall have a period of thirty (30) days to comply with the above requirements; provided, however, that during said thirty (30) day period, a battery operated carbon monoxide detector with an alarm shall be installed.

2. APPROVED CARBON MONOXIDE DETECTORS. Each carbon monoxide detector as required in accordance with the above provisions shall comply with NFPA 720 and be ANSI/UL 2034 listed and IAS certified.

3. SIGNAGE. A metal or plastic identification plate shall be permanently mounted to the exterior of the building at a minimum height of eight (8) feet above grade directly in line with the exhaust vent terminal for the horizontally vented gas fueled heating appliance or equipment. The sign shall read, in print size no less than one-half (1/2) inch in size, **"GAS VENT DIRECTLY BELOW. KEEP CLEAR OF ALL OBSTRUCTIONS".**

4. INSPECTION. The state or local gas inspector of the side wall horizontally vented gas fueled equipment shall not approve the installation unless, upon inspection, the inspector observes carbon monoxide detectors and signage installed in accordance with the provisions of 248 CMR 5.08(2)(a)1 through 4.

(b) EXEMPTIONS: The following equipment is exempt from 248 CMR 5.08(2)(a)1 through 4:

1. The equipment listed in Chapter 10 entitled "Equipment Not Required To Be Vented" in the most current edition of NFPA 54 as adopted by the Board; and

2. Product Approved side wall horizontally vented gas fueled equipment installed in a room or structure separate from the dwelling, building or structure used in whole or in part for residential purposes.

(c) MANUFACTURER REQUIREMENTS - GAS EQUIPMENT VENTING SYSTEM PROVIDED. When the manufacturer of Product Approved side wall horizontally vented gas equipment provides a venting system design or venting system components with the equipment, the instructions provided by the manufacturer for installation of the equipment and the venting system shall include:

1. Detailed instructions for the installation of the venting system design or the venting system components; and

2. A complete parts list for the venting system design or venting system.

(d) MANUFACTURER REQUIREMENTS - GAS EQUIPMENT VENTING SYSTEM NOT PROVIDED. When the manufacturer of a Product Approved side wall horizontally vented gas fueled equipment does not provide the parts for venting the flue gases, but identifies "special venting systems", the following requirements shall be satisfied by the manufacturer:

1. The referenced "special venting system" instructions shall be included with the appliance or equipment installation instructions; and

2. The "special venting systems" shall be Product Approved by the Board, and the instructions for that system shall include a parts list and detailed installation instructions.

(e) A copy of all installation instructions for all Product Approved side wall horizontally vented gas fueled equipment, all venting instructions, all parts lists for venting instructions, and/or all venting design instructions shall remain with the appliance or equipment at the completion of the installation.

GAS INSTALLATION CHECKLIST

This general checklist does not contain all pertinent installation details or specifics and does not supersede the guidelines in this manual. Your Regency dealer/installer should use it in conjunction with manual instructions. Please follow all local codes and jurisdictions in authority.

Customer:		**Date Installed:**	
Install Address:		**Location of Fireplace:**	
Serial No:		**Installer:**	
Model No:			

Site Requirements	**YES**	**NO**
If applicable, are the insulation, vapour barrier, and drywall present if installed on an outside wall or chase?		
Does the area have a solid continuous base to support the unit?		
Will the area accommodate the size of the applliance and all clearances?		
Are the gas and electrical roughed into the area where the unit is being installed?		
In City & Grandview series cool wall applications, is the chase enclosure sealed to prevent heat from escaping? All hot air from the unit must exit via the mandatory ventilation openings.		
In City & Grandview applications, Is the chase enclosure vented with the mandatory heat ventilation openings? See manual for details.		
If applicable, is the masonry/factory built freplace in its original condition with no modifications?		
If applicable, have the hearth requirements been met?		
Unit Setup	**YES**	**NO**
If applicable, are the standoffs and top nailing flange extensions installed and at the correct depth to accommodate finishing material? See manual for details.		
If applicable, is the fireplace level and secured, meeting framing clearances? See manual for details.		
If applicable, is the unit converted to top or rear vent per manual instructions, and the insulation discarded?		
Venting	**YES**	**NO**
Are the venting components approved for the unit installed?		
Does the venting configuration comply with venting diagrams?		
Is venting installed and secured, and are clearances for the vent pipe and termination cap maintained?		
If applicable, was a 1/4" rise maintained for every foot of horizontal run?		
Was the termination installed and sealed?		
Is the direct vent termination at the highest point in the vent assembly?		
If applicable, are both chimney liners continuous from flue collars to termination?		
Electrical and Wiring	**YES**	**NO**
Is the appliance connected to the household's 110/120v per local codes? Check local codes for receptacle placement.		
Were the connections in the fireplace tested with a circuit tester?		
Is the appliance properly grounded?		
If applicable, is the supplied electrical/gang box affixed to the wall to facilitate the mounting of the receiver/battery box ?		
If applicable, is all electrical, Ethernet, HDMI, networking, optical, wire/cables, conduits, etc. run through the wood or steel stud work as wires/cables of any kind cannot be exposed directly above or over the fireplace?		
Gas	**YES**	**NO**
Does the supply pressure meet the requirements shown on the rating plate?		
Was a conversion performed?		
Was a leak check performed and manifold pressures verified?		

Is the shut-off valve installed and easily accessible to the customer?		
Finishing	**YES**	**NO**
If applicable, is only noncombustible material installed in the noncombustible areas?		
Do clearances meet installation and manual requirements?		
Do the mantels and/or projections comply with the installation manual?		
If applicable, was the solid fuel fireplace warning plate installed?		
Is the chase enclosure fully open the full width, height and depth above the fireplace as per the requirements noted in the framing section?		
Appliance Media Setup	**YES**	**NO**
Do commands from the remote or wall switch light the pilot and main burner?		
Are the burner media/log set, glass door, and screen installed per instructions in the manual?		
Was the air shutter on the proper setting after running the unit for 20 minutes?		
If applicable, were the surround and trims installed according to the manual?		
Was the operation of the fan, lights (if installed), and flame modulation checked?		
Customer Tutorial and Presentation	**YES**	**NO**
Is the customer confident operating the new gas appliance and aware of all the features on the remote?		
Confirm that the rating and lighting plates are attached to the appliance. Do not remove.		
Was the customer informed of the location of the rating and lighting plates?		
Was accessing unit controls in a power outage explained to the customer?		
Are the model and serial numbers and the date of installation of the unit written in the manual and on the checklist?		
Were the warranty and unit registration reviewed with the customer?		
Comments:		

IMPORTANT MESSAGE SAVE THESE INSTRUCTIONS

The Direct Vent Freestanding Gas Stove must be installed in accordance with these instructions. Carefully read all the instructions in this manual first. Consult the building authority having jurisdiction to determine the need for a permit prior to starting the installation.

Note: Failure to follow the instructions could cause a malfunction of the heater which could result in death, serious bodily injury, and/or property damage. Failure to follow these instructions may also void your fire insurance and/or warranty.

Note: These instructions take precedence over Simpson Dura-Vent instructions.

SPECIFICATIONS

Fuels: H15E-NG11 is approved for use with natural gas.

H15E-LP11 is approved for use with liquefied petroleum gases (propane).

Electrical: 120V A.C. system.

Optional Circulation Fan:
Variable speed, 125/75.

Log Sets: Ceramic fibre, 4 per set.

Vent System: Coaxial (6-5/8" outer / 4" inner liner) rigid flue and termination cap.

MOBILE / MANUFACTURED HOMES AFTER FIRST SALE

This Hampton® product has been tested and listed by ITS Testing Services as a Direct Vent Room Heater to the following standards: CSA-2.17-2017 and ANSI Z21.88/CSA 2.33.

This Direct Vent System Appliance must be installed in accordance with the manufacturer's installation instructions and the Manufactured Home Construction and Safety Standard, Title 24 CFR, Part 3280, or the current Standard of Fire Safety Criteria for Manufactured Home Installations, Sites, and Communities ANSI/NFPA 501A, and with CAN/CSA Z240-MH Mobile Home Standard in Canada.

This appliance installation must comply with the manufacturer's installation instructions and local codes, if any. In the absence of local codes follow the current National Fuel Gas Code, ANSI Z223.1 and the current National Electrical Code ANSI/NFPA 70 in the U.S.A., and the current CSA B149.1 Gas Installation Code and the current Canadian Electrical Code CSA C22.1 in Canada.

This Hampton® Mobile/Manufactured Home Listed appliance comes factory equipped with a means to secure the unit.

This Hampton® Mobile/Manufactured Home listed appliance comes equipped with a dedicated #8 ground lug to which an 18 gauge copper wire from the steel chassis ground must be attached.

This appliance may only be installed in an aftermarket permanently located, manufactured (USA only) or mobile home, where not prohibited by local codes.

This appliance is only for use with the type of gas indicated on the rating plate. This appliance is not convertible for use with other gases, unless a certified kit is used.

BEFORE YOU START

Safe installation and operation of this appliance requires common sense, however, we are required by the Canadian Safety Standards and ANSI Standards to make you aware of the following:

INSTALLATION AND REPAIR SHOULD BE DONE BY AN AUTHORIZED SERVICE PERSON. THE APPLIANCE SHOULD BE INSPECTED BEFORE USE AND AT LEAST ANNUALLY BY A PROFESSIONAL SERVICE PERSON. MORE FREQUENT CLEANING MAY BE REQUIRED DUE TO EXCESSIVE LINT FROM CARPETING, BEDDING MATERIAL, ETC. IT IS IMPERATIVE THAT CONTROL COMPARTMENTS, BURNERS AND CIRCULATING AIR PASSAGEWAYS OF THE APPLIANCE BE KEPT CLEAN.

DUE TO HIGH TEMPERATURES, THE APPLIANCE SHOULD BE LOCATED OUT OF TRAFFIC AND AWAY FROM FURNITURE AND DRAPERIES.

WARNING: FAILURE TO INSTALL THIS APPLIANCE CORRECTLY WILL VOID YOUR WARRANTY AND MAY CAUSE A SERIOUS HOUSE FIRE.

CHILDREN AND ADULTS SHOULD BE ALERTED TO THE HAZARDS OF HIGH SURFACE TEMPERATURES, ESPECIALLY THE FIREPLACE GLASS, AND SHOULD STAY AWAY TO AVOID BURNS OR CLOTHING IGNITION.



YOUNG CHILDREN SHOULD BE CAREFULLY SUPERVISED WHEN THEY ARE IN THE SAME AREA AS THE APPLIANCE. TODDLERS, YOUNG CHILDREN AND OTHERS MAY BE SUSCEPTIBLE TO ACCIDENTAL CONTACT BURNS. A PHYSICAL BARRIERS IS RECOMMENDED IF THERE ARE AT RISK INDIVIDUAL IN THE HOUSE. TO RESTRICT ACCESS TO A FIREPLACE OR STOVE, INSTALL AN ADJUSTABLE SAFETY GATE TO KEEP TODDLERS, YOUNG CHILDREN AND OTHER AT RISK INDIVIDUALS OUT OF THE ROOM AND AWAY FROM HOT SURFACES.

CLOTHING OR OTHER FLAMMABLE MATERIAL SHOULD NOT BE PLACED ON OR NEAR THE APPLIANCE.

A BARRIER DESIGNED TO REDUCE THE RISK OF BURNS FROM THE HOT VIEWING GLASS IS PROVIDED WITH THIS APPLIANCE AND SHALL BE INSTALLED FOR THE PROTECTION OF CHILDREN AND OTHER AT-RISK INDIVIDUALS.

IF THE BARRIER BECOMES DAMAGED, THE BARRIER SHALL BE REPLACED WITH THE MANUFACTURER'S BARRIER FOR THIS APPLIANCE.

ANY SAFETY SCREEN, GUARD, OR BARRIER REMOVED FOR SERVICING AN APPLIANCE MUST BE REPLACED PRIOR TO OPERATING THE APPLIANCE.

LIGHTING PROCEDURE

IMPORTANT: The remote control system supplied with this appliance has several options for starting/operating the appliance using the power button and ON/OFF key on the hand held transmitter.
Prior to operating this appliance, please read the remote control operating instructions (packaged with remote control) to understand how to operate this remote control system.

1. Ensure the Main switch is in the ON position.

2. Press and release the ON/OFF button on the remote handheld transmitter (see Diagram 2). An audible beep should be heard from the IFC.



Diagram 2
Remote shown in Manual Mode on Hi

3. After approximately 4 seconds the spark ignition system will spark for 60 seconds to light the pilot.

4. The unit will turn on.



Note: The first try for ignition will last approximately 60 seconds. If there is no flame ignition (rectification) the board will stop sparking for approximately 35 seconds. After wait time , the board will start second try for ignition by sparking for approximately 60 seconds . If there is still no positive ignition the board will go into lock out.

The system will need to be reset as follows:

a) Wait 5 minutes - turn the system off by pressing the ON/OFF button on the remote.
b) After approximately 2 seconds turn on ON/OFF switch or press ON/OFF button if using optional remote.
c) Repeat step 2.

SHUTDOWN PROCEDURE

1. Press the ON/OFF button on the remote

2. If service is to be performed- you must disconnect power and shut off gas to the unit.

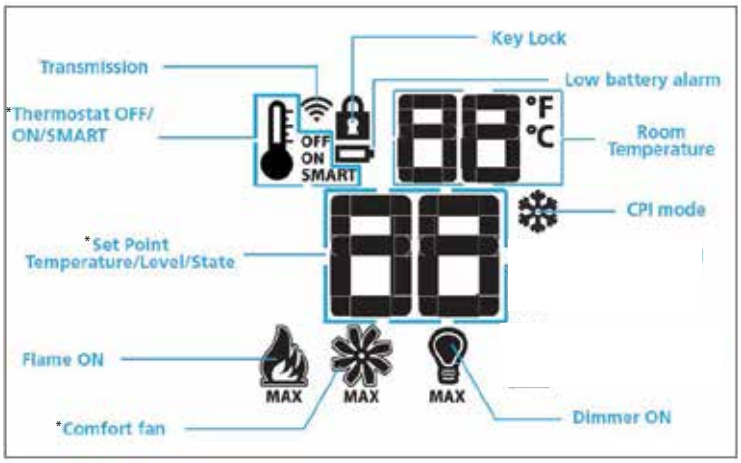

Fan Operation:
The optional fan can be operated by using the remote control supplied with this unit. See remote control instructions.

Note:
In thermostat mode: When the appliance is turned on, the fan will not come on for the first 5 minutes (if fan is turned on). When the appliance is turned off the fan will not turn off for 12 minutes (if in on position)

Manual mode: Fan will turn on and off immediately using the remote control transmitter if the fan function is in the "on" position.

Continuous Pilot/Intermittent Pilot (CPI/IPI) **selection**

See remote control instructions for details.

COPY OF THE LIGHTING PLATE INSTRUCTIONS

FOR YOUR SAFETY READ BEFORE LIGHTING
POUR VOTRE SÉCURITÉ – À LIRE AVANT LA MISE EN MARCHE

WARNING: If you do not follow these instructions exactly, a fire or explosion may result causing property damage, personal injury or loss of life. Improper installation, adjustment, alteration, service or maintenance can cause injury or property damage. Refer to the owner's information manual provided with this appliance. For assistance or additional information consult a qualified installer, service agency or gas supplier.

AVERTISSEMENT : Quiconque ne respecte pas scrupuleusement les instructions de la présente notice risque de déclencher un incendie ou une explosion pouvant entraîner des dégâts matériels ou des blessures pouvant être mortelles.
Tout défaut d'installation, de réglage, de modification, de service ou d'entretien peut entraîner des blessures ou des dommages matériels. Reportez-vous au manuel d'utilisation fourni avec cet équipement. Pour obtenir de l'aide ou des informations complémentaires, consulter un installateur ou un service d'entretien qualifié, ou le fournisseur de gaz.

A) This appliance is equipped with an ignition device which automatically lights the pilot.
Do not try to light the pilot by hand.
B) BEFORE OPERATING smell all around the appliance area for gas. Be sure to smell next to the floor because some gas is heavier than air and will settle on the floor.
WHAT TO DO IF YOU SMELL GAS
- Do not try to light any appliance.
- Do not touch any electric switch, do not use any phone in your building.
- Leave the building immediately.
- Immediately call your gas supplier from a neighbours phone. Follow the gas supplier's instructions.
- If you cannot reach your gas supplier, call the fire department.

C) Do not use this appliance if any part has been under water. Immediately call a qualified service technician to inspect the appliance and to replace any part of the control system and any gas control which has been underwater.

A) Cet appareil est muni d'un dispositif d'allumage qui allume automatiquement la veilleuse.
Ne tentez pas d'allumer la veilleuse manuellement.
B) AVANT LA MISE EN MARCHE, reniflez tout autour de l'appareil pour déceler une odeur de gaz. Reniflez au niveau du plancher, car certains gaz sont plus lourds que l'air et peuvent s'accumuler au niveau du sol.
QUE FAIRE SI VOUS SENTEZ UNE ODEUR DE GAZ :
- Ne tentez pas d'allumer l'appareil
- Ne touchez à aucun interrupteur; n'utilisez pas le téléphone se trouvant dans le bâtiment.
- Quittez immédiatement le bâtiment.
- Appelez immédiatement votre fournisseur de gaz depuis un téléphone extérieur. Suivez les instructions du fournisseur.
- Si vous ne pouvez pas rejoindre le fournisseur, appelez le service incendie.

C) N'utilisez pas cet appareil s'il a été plongé dans l'eau, même partiellement. Faites inspecter l'appareil par un technicien qualifié et remplacez tout élément du système de contrôle ou de commande qui a été plongé dans l'eau.

CAUTION: Hot while in operation. Do not touch. Severe burns may result. Due to high surface temperatures keep children, clothing and furniture, gasoline and other liquids having flammable vapors away. Keep burner and control compartment clean. See installation and operating instructions accompanying appliance.

ATTENTION : Surfaces chaudes lorsque l'appareil est en marche. Ne pas toucher. Risque de brûlures graves. En raison des températures élevées, les enfants, les vêtements et le mobilier, le carburant et tout autre liquide aux vapeurs inflammables doivent être tenus éloignés de l'appareil. Nettoyer régulièrement le brûleur et le compartiment des commandes. Voir les consignes d'installation et d'utilisation fournies avec l'appareil.

OPERATING INSTRUCTIONS / CONSIGNES DE FONCTIONNEMENT

1) STOP! Read the safety information above on this label.
2) Ensure the Main switch is in the ON position and/or the wall mounted battery holder (if equipped) is in the <REMOTE> position.
3) Press and release the ON/OFF button on the remote handheld transmitter. An audible beep should be heard from the receiver. If not using the remote, the unit can also be turned on by sliding the battery holder switch to the <ON> position (if equipped).
4) After approximately 4 seconds the spark ignition system will spark for 60 seconds to light the main burner.
5) The unit will turn on.
Note: The first attempt to ignition will last approximately 60 seconds. If there is no flame ignition (rectification) the board will stop sparking for approximately 35 seconds. After this wait time, the board will start a second try for ignition by sparking for approximately 60 seconds. If there is still no positive ignition after the second attempt the board will go into lock out.
The system will need to be reset as follows (after going into lock out mode):
a) Wait 5 minutes - turn the system off by pressing the ON/OFF button on the remote.
b) After approximately 2 seconds press the ON/OFF button again.
c) Unit will repeat step 2.
6) If the appliance will not operate, follow the instructions, "To Turn Off Gas to Appliance" and call your service technician or gas supplier.
This appliance is equipped with an on-demand pilot that shuts off after seven days.

1) STOP! Lisez les instructions de sécurité sur la portion supérieure de cette étiquette.
2) S'assurer que le commutateur principal est en position ON et/ou que le bloc-piles mural (le cas échéant) est en position <REMOTE>.
3) Appuyer sur la touche ON/OFF de la télécommande puis relâcher. Un bip sonore retentira depuis le récepteur. Si vous n'utilisez pas la télécommande, l'appareil peut également être allumé en faisant glisser le commutateur du bloc-piles sur la position <ON> (le cas échéant).
4) Après environ 4 secondes, le système d'allumage produira une étincelle pendant 60 secondes pour allumer le brûleur principal.
5) L'appareil s'allumera.
Remarque : Au premier allumage, le système tente d'allumer les flammes pendant 60 secondes. Si l'essai est infructueux, le système fera une pause de 35 secondes. C'est ce qu'on appelle l'étape de rectification. Ce délai écoulé, le système tente à nouveau d'allumer les flammes en produisant des étincelles pendant 60 secondes. Si les flammes ne s'allument toujours pas, le système se met en mode verrouillage.
Il faut alors le réinitialiser en suivant les étapes ci-dessous (pour le déverrouiller) :
a) Attendre 5 minutes et éteindre l'appareil en appuyant sur la touche ON/OFF de la télécommande.
b) Attendre 2 secondes et appuyer encore une fois sur la touche ON/OFF.
c) L'appareil répètera l'étape 2.
6) Si l'appareil ne fonctionne pas, suivez les instructions "Pour couper le gaz au niveau de l'appareil" et appelez un technicien qualifié ou votre fournisseur de gaz.
Cet appareil est équipé d'une veilleuse sur demande qui s'éteint après sept jours.

TO TURN OFF GAS TO APPLIANCE / POUR COUPER LE GAZ AU NIVEAU DE L'APPAREIL

1) Press the ON/OFF button on the remote or slide the wall mount switch to the "OFF" position.
2) If service is to be performed–you must disconnect power and shut off gas to the unit.
1) Appuyer sur la touche ON/OFF de la télécommande ou faites glisser l'interrupteur mural sur la position "OFF".
2) Lors de l'entretien de l'appareil, vous devez débrancher l'alimentation électrique et couper le gaz alimentant l'appareil.

DO NOT REMOVE THIS INSTRUCTION PLATE
NE PAS ENLEVER CETTE ÉTIQUETTE D'INSTRUCTIONS

919-649b

PROFLAME II REMOTE CONTROL OPERATING INSTRUCTIONS

IMPORTANT: The Proflame Transmitter 2 is an integrated part of the Proflame 2 System, which consists of these elements:

- Proflame 2 Transmitter, to be used in conjunction with:
- Integrated Fireplaces Control (Proflame 2 IFC)

The Proflame 2 Transmitter provides for controlling the following hearth appliance functions:

1. Main Burner On/Off
2. Main Burner flame modulation (6 levels)
3. Choice of standing or intermittent pilot (CPI/IPI)
4. Thermostat and Smart thermostat functions
5. Accent light modulation (6 levels)**
6. Split flow valve**
7. Comfort Fan speed modulation (6 levels)**

** This feature is not available on any Hampton models.

The Proflame Transmitter uses a streamline design with a simple button layout and informative LCD display (Fig. 1). A Mode Key is provided to index between the features and a Thermostat Key is used to turn on/off or index through Thermostat functions (Fig. 1 & 2). Additionally, a Key Lock feature is provided (Fig. 22).



Figure 1: Proflame Transmitter

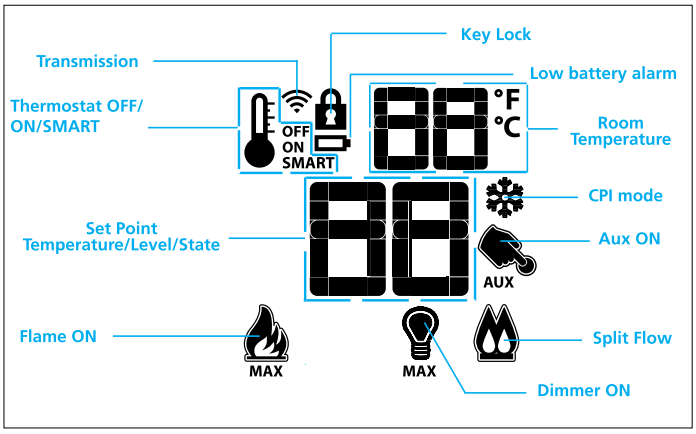

Figure 2: Transmitter LCD Display

TECHNICAL DATA REMOTE CONTROL	
Supply Voltage	4.5V (three 1.5V AAA batteries)
Ambient temperature ratings	0 - 50°C (32 - 122°F)
Radio Frequency	315 MHZ

WARNING: THE TRANSMITTER AND IFC ARE RADIO FREQUENCY DEVICES.

ATTENTION!

- Turn "OFF" the main gas supply of the appliance during installation or maintenance of the IFC.

- Turn "OFF" main gas supply to the appliance prior to removing or reinserting the batteries.

- In case of remote control malfunction, turn off the IFC device using the "ON/OFF" main switch.

- For installation / maintenance, switch off the IFC device removing main power supply plug.

This appliance requires coding/pairing of the remote control and IFC (Integrated Fireplace Control).
See remote/IFC coding/pairing instructions found in this manual.



Figure 3: Battery Compartment

Note: Only use regular alkaline batteries. Do not use rechargeable or lithium batteries.

Temperature indication Display

With the system in the "OFF" position, press the Thermostat Key and the Mode Key at the same time. Look at the LCD screen on the transmitter to verify that a C or F is visible to the right of the room temperature display (Fig. 4 & 5).

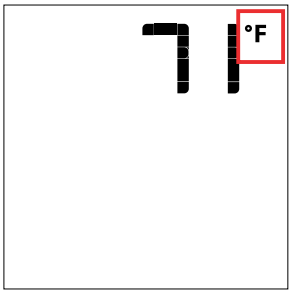

Figure 4: Remote Control display in Fahrenheit.

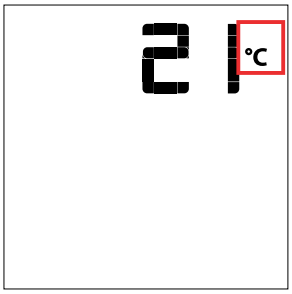

Figure 5: Remote Control display in Celsius.

Turn on the Appliance

With the system OFF, press the ON/OFF Key on the Transmitter. The Transmitter display will show some other active Icons on the screen. At the same time the IFC will activate the appliance. A single "beep" from the IFC will confirm reception of the command.

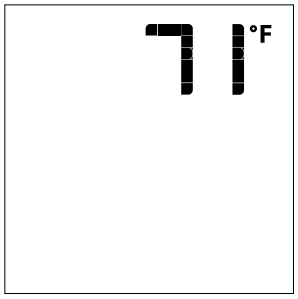

Figure 6: Remote Control display

Turn off the Appliance

With the system ON, press the ON/OFF Key on the Transmitter. The Transmitter LCD display will only show the room temperature (Fig. 6). At the same time the IFC will turn off the appliance. A single "beep" from the IFC confirms reception of the command.

Remote-Flame Control

The Proflame has six (6) flame levels. With the system on, and the flame level at the maximum in the appliance, pressing the Down Arrow Key once will reduce the flame height by one step until the flame is turned off. The Up Arrow Key will increase the flame height each time it is pressed. If the Up Arrow Key is pressed while the system is on but the flame is off, the flame will come on in the high position (Fig. 7 & 8). A single "beep" will confirm reception of the command.

Fig. 7

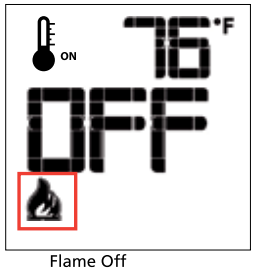

Flame Off

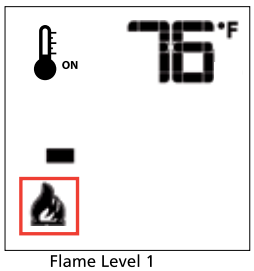

Flame Level 1

Fig. 8

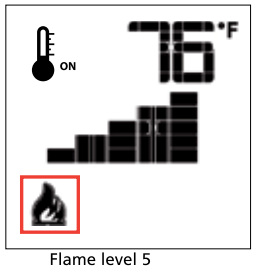

Flame level 5

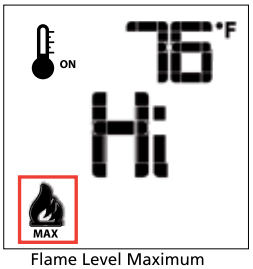

Flame Level Maximum

Room Thermostat (Transmitter Operation)

The Remote Control can operate as a room thermostat. The thermostat can be set to a desired temperature to control the comfort level in a room. To activate this function, press the Thermostat Key (Fig. 1). The LCD display on the Transmitter will change to show that the room thermostat is "ON" and the set temperature is now displayed (Fig. 9). To adjust the set temperature, press the Up or Down Arrow Keys until the desired set temperature is displayed on the LCD screen of the Transmitter.

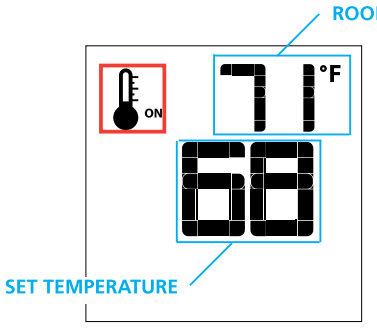

Figure 9

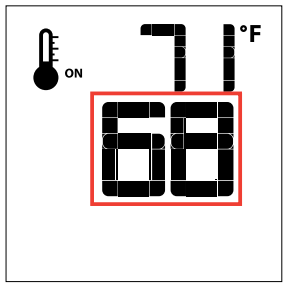

Figure 10

Smart Thermostat (Transmitter Operation)

The Smart Thermostat function adjusts the flame height in accordance to the difference between the set point temperature and the actual room temperatures. As the room temperature gets closer to the set point the Smart Function will modulate the flame down.
To activate this function, press the Thermostat Key (Fig. 1) until the word "SMART" appears to the right of the temperature bulb graphic (Fig. 11). To adjust the set temperature, press the Up or Down Arrow Keys until the desired set temperature is displayed on the LCD screen of the Transmitter (Fig. 12).
Note: When Smart Thermostat is activated, manual flame height adjustment is disabled.

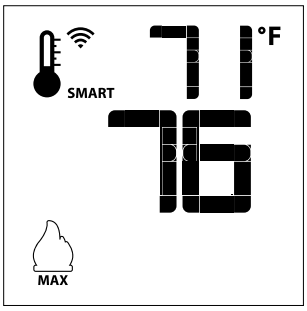

Figure 11: Smart Flame Function

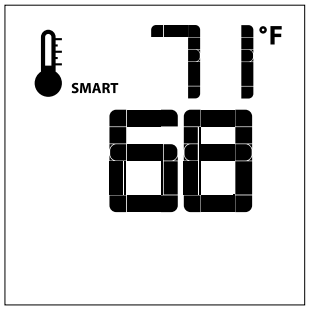

Figure 12

Remote Dimmer Control (Light)**

The auxiliary function controls the AUX power outlet by the dimmable light control. To activate this function use the Mode Key (Fig. 1) to index to the AUX icon (Fig. 15 & 16).
The intensity of the output can be adjusted through six (6) levels. Use the Up/Down Arrow Keys (Fig. 1) adjust the output level (Fig. 16). A single "beep" will confirm reception of the command.

Note: This function is available only with the IFC Control Module.

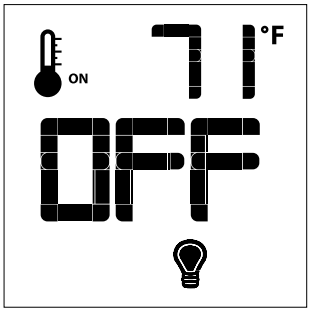

Figure 15

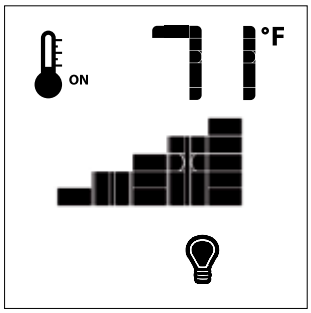

Figure 16

Fan Speed Control**

If the appliance is equipped with a hot air circulating fan, the speed of the fan can be controlled by the Proflame system. The fan speed can be adjusted through six (6) speeds. To activate this function use the Mode Key (Fig. 1) to index to the fan control icon (Fig. 13). Use the Up/Down Arrow Keys (Fig. 1) to turn on, off or adjust the fan speed (Fig. 14). A single "beep" will confirm reception of the command.



Figure 13

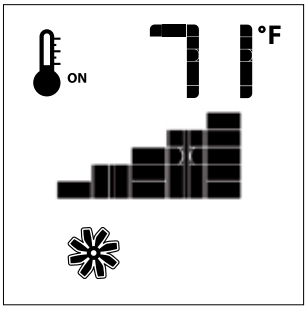

Figure 14

Split Flow control**

The secondary burner is controlled by the split Flow. To activate this function use the Mode Key (Fig. 1) to index to the SPLIT FLOW mode icon (Fig. 17 & 18).
Pressing the Up Arrow Key will activate the secondary burner. Pressing the Down Arrow Key will turn the secondary burner off. A single "beep" will confirm the reception of the command.

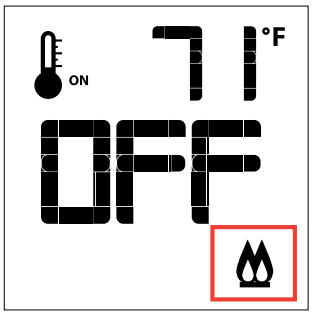

Figure 17

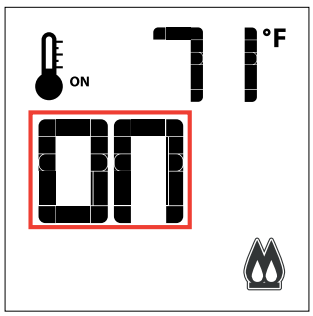

Figure 18

Continuous Pilot/Intermittent Pilot (CPI/IPI) selection

Note: Power vent models do not have a Continuous Pilot option.

With the system in "OFF" position press the Mode Key (Fig. 1) to index to the CPI mode icon (Fig. 19 & 20).
Pressing the Up Arrow Key will activate the Continuous Pilot Ignition mode (CPI). Pressing the Down Arrow Key will return to IPI. A single "beep" will confirm the reception of the command.

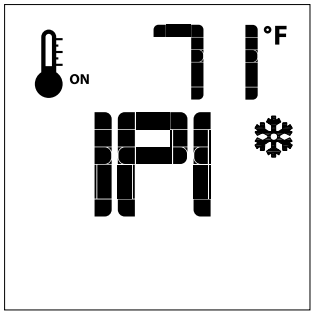

Figure 19

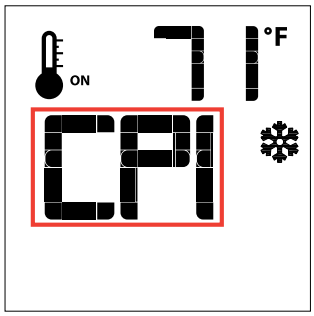

Figure 20

CPI/IPI SWITCH

This appliance comes equipped with a CPI/IPI switch. The functions of both the CPI/IPI switch are as follows:
Continuous pilot (CPI) - A pilot that when in operation, is intended to remain continuously ignited until it is manually interrupted.
Intermittent pilot (IPI) - A pilot that is automatically ignited when an appliance is called on to operate and which remains continuously ignited during each period of main burner operation. The pilot is automatically extinguished when each main burner operating cycle is completed. The mode of the fireplace is easily changed from an intermittent pilot ignition system (IPI) to a continuous pilot ignition system (CPI) by using remote control as noted above.
The benefits of having as CPI are as follows:
-Keeps venting primed for trouble free start-up under colder weather conditions or inversions.
-Keeps the unit glass warm, which decreases the amount of condensation on start-up
-Provides owners with flexibility to choose a traditional continuous pilot.
The primary benefit of having the IPI function is a significant savings on fuel as the pilot will only run when there is a call for heat.

Thermostat Icon: If the thermostat icon is not present on the remote transmitter, follow instructions noted below:
1.Remove one battery from the remote.
2. Press and hold down the Thermostat button on the remote.
3. Reinstall the battery(removed in Step 1) while still holding down thermostat button.
4. If you see **"Set"** the thermostat option is now enabled. If you see "**Clr**" the thermostat option is now disabled.
5. Repeat the procedure if the **"Set"** or "**Clr**" to remove or add the option back to the remote did not appear.

Enable all other functions if not present on the remote transmitter, follow instructions noted below:
1. Remove one battery from remote.
2. Press and hold both the **ON/OFF** and **MODE** button at the same time .
3. Reinstall battery removed in Step 1 while holding both buttons—keep holding buttons, then release the **MODE** button only.
4.The screen will show either **"Clr"** or **"Set"** as the first option available is to disable or enable a mode.
5. **"Clr"** will remove a mode—use the up or down arrow while holding down **ON/OFF** and **MODE** (mode icon will disappear once removed).
6. Use the **"MODE"** button to move to the next function.
7. **"Set"** will add a mode —use the up or down arrow while holding down **ON/OFF** and **MODE** (mode icon will appear when added).
8. Use the **"MODE"** button to move to the next function.

Note: You should never program out the fan (if installed) or CPI/IPI mode on the remote.

KEY LOCK

This function will lock the keys to avoid unsupervised operation.
To activate this function, press the MODE and UP Keys at the same time (Fig. 21).
To de-activate this function, press the MODE and UP Keys at the same time.

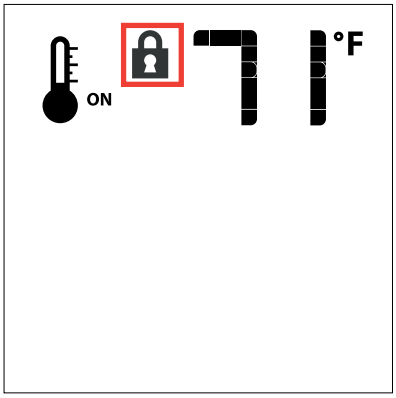

Figure 21

LOW BATTERY POWER DETECTION

Transmitter

The life span of the remote control batteries depends on various factors: quality of the batteries used, the number of ignitions of the appliance, the number of changes to the room thermostat set point, etc.
When the Transmitter batteries are low, a Battery Icon will appear on the LCD display of the Transmitter (Fig. 22) before all battery power is lost. When the batteries are replaced this Icon will disappear.

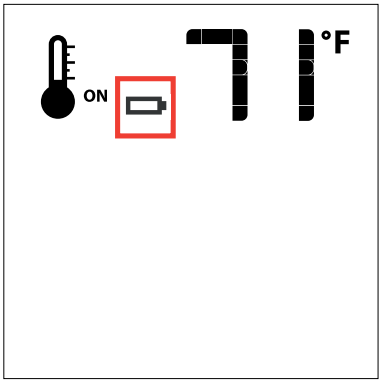

Figure 22

1) Provide adequate clearances for servicing, proper operation and around the air openings into the combustion chamber.

2) The appliance must be installed on a flat, solid, continuous surface (e.g. wood, metal, concrete). This may be the floor, or it can be raised up on a platform to enhance its visual impact. The appliance may be installed on carpeting, tile, wood flooring or other combustible material, because the appliance's base extends the full width and depth of the appliance. The Direct Vent Freestanding Gas Stove can be installed in a wide variety of ways and will fit nearly any room layout. It may be installed in a recessed position, framed out into the room, or across a corner.

3) The Direct Vent Freestanding Gas Stove is approved for alcove installations, which meet the clearances listed in the "Clearance to Combustibles" section. This unit is approved for manufactured home installations, see the "Manufactured Mobile Home Additional Requirements" and "Rigid Pipe Venting Systems" sections for the required vent arrangements. If installed into a manufactured home the unit must be bolted down to the floor.

4) This appliance is Listed for bedroom installations when used with a Listed Millivolt Thermostat. Some areas may have further requirements, check local codes before installation.

5) This appliance is Listed for Alcove installations, maintain minimum Alcove clearances as follows, minimum width of 32-1/2" (825mm), a maximum depth of 36" (914mm), and minimum height of 24" (610mm) from top of unit to ceiling.

6) We recommend that you plan your installation on paper using exact measurements for clearances and floor protection before actually installing this appliance. Have a qualified building inspector review your plans before installation.

GENERAL SAFETY INFORMATION

1) The appliance installation must conform with local Canadian Electrical Code.

2) The appliance when installed, must be electrically grounded in accordance with local codes, or in the absence of local codes with the current National Electrical Code, ANSI/NFPA 70 or CSA C22.1 Canadian Electrical Code.

3) The appliance should be inspected for shipping damage before use and **serviced annually by a professional service person**. More frequent cleaning may be required due to excessive lint from carpeting, bedding material, etc. It is imperative that control compartments, and circulating air passageways of the appliance be kept clean and free from excessive lint from carpeting.

4) See general construction and assembly instructions. The appliance and vent should be enclosed when installed in or passing through a living area, where children may come in contact with it.

5) This appliance must be connected to the specified vent and termination cap to the outside of the building envelope.Never vent to another room or inside a building. Make sure that the vent is fitted as per the instructions starting in the "Exterior Vent Terminal Locations" section.

6) Inspect the venting system annually for blockage and any signs of deterioration.

7) Venting terminals shall not be recessed into a wall or siding.

8) Any safety glass removed for servicing must be replaced prior to operating the appliance.

9) To prevent injury, do not allow anyone who is unfamiliar with the operation to use the fireplace.

INSTALLATION CHECKLIST

1) Locate your gas appliance. Refer to the following sections:

a. Locating Your Gas Stove
b. Clearances to Combustibles
c. "Venting Introduction" to "Exterior Vent Terminal Locations" sections.

2) Install Optional Fan. Refer to the "Optional Fan Installation" section.

3) Set vent restrictor. Refer to the "Vent Restrictor Position" section.

4) Install venting: Check all venting requirements. See "Venting Introduction" to "Dura-Vent Vertical Termination" sections.

5) Make gas connections. Refer to the "Gas Connection" section.

If converting to Propane, make changes prior as instructed in the "Conversion from Natural Gas to Propane" section.

6) Install 3 AAA batteries into Remote transmitter and pair with the IFC board (see Remote Control section).

7) Test Gas Pressure. Refer to the "Gas Pipe Pressure Testing" section.

8) Install standard and optional features. Refer to the following sections where applicable:

a. Log Set Installation
b. Wall Thermostat
c. Remote Control

9) Final check. Refer to the "Final Check" section.

Before leaving this unit with the customer, the installer must ensure that the appliance is firing correctly and **operation fully explained to customer**.

This includes:

1) Clocking the appliance to ensure the correct firing rate (rate noted on label) after burning appliance for 15 minutes.

2) If required, adjusting the primary air to ensure that the flame does not carbon. First allow the unit to burn for 15-20 min. to stabilize.

CAUTION: Any alteration to the product that causes sooting or carboning that results in damage is not the responsibility of the manufacturer.

WARNING: Cancer and Reproductive Harm
www.P65Warnings.ca.gov
919-874

CLEARANCES TO COMBUSTIBLES

The clearances listed are MINIMUM distances. Measure the clearance to both the appliance and the chimney connector. **The farthest distance is correct if the two clearances do not coincide.**

For example, if the appliance is set as indicated in one of the figures but the connector is too close, move the stove until the correct clearance to the connector is obtained.

This appliance may be installed only with the clearances as shown in the situations pictured. **Do not combine clearances from one type of installation with another in order to achieve closer clearances.**

This unit can be installed on a solid combustible surface like a wood floor. This unit can also be installed directly on carpeting or vinyl.

Use the minimum clearances shown in the diagrams below:

H15E-NG11 & H15E-LP11Clearances

A Left Side Wall to Unit* 6" / 150 mm
*B Back Wall to Unit 0" / 0 mm
C Vertical Vent Pipe to Back Wall 2" / 50 mm
E Unit Corner to Wall 2" / 5 0 mm
Unit Top to Alcove Ceiling 24" / 610 mm

Minimum ceiling height is 24" /610 mm from top of unit.

***IMPORTANT**

It is recommended that unit is moved away from the wall, if installing the blower option, so the fan can be easily installed and/or serviced.

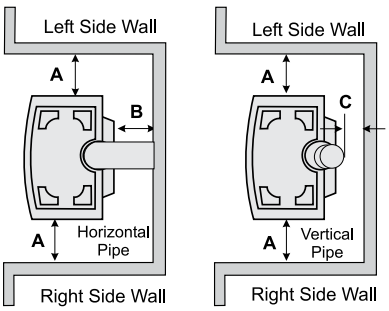

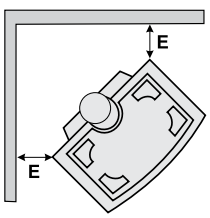

LOCATING YOUR GAS STOVE

When selecting a location for your stove, ensure that the clearances listed above are met as well as ensuring that there is adequate accessibility for servicing and proper operation.

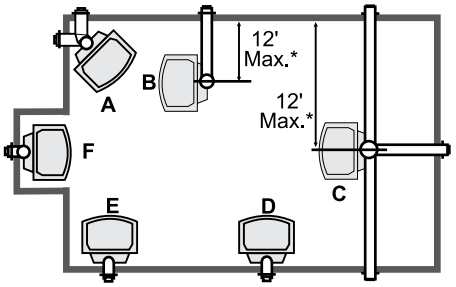

* 12' max. only if vertical height is achieved.

A) Cross Corner
B) Room Divider
C) Island
D) Flat on Wall
E) Flat on Wall Corner
F) Flush with Wall/Alcove

For Vent Termination requirements, see the "Exterior Vent Terminal Locations" section.

MANUFACTURED MOBILE HOME ADDITIONAL REQUIREMENTS

1) Ensure that structural members are not cut or weakened during installation.

2) Ensure proper grounding using the #8 ground lug provided.

3) Appliance must be anchored to the floor with the supplied anchoring methods.

COMBUSTION AND VENTILATION AIR

The combustion air from this appliance is drawn from outside the building through the outer flue. **Extra provision for combustion air inside the room is not required.**

ACCENT LIGHT BULB INSTALL

Accent light bulb is packed in the manual pack.

1. Lift off cast top and place on a soft surface.

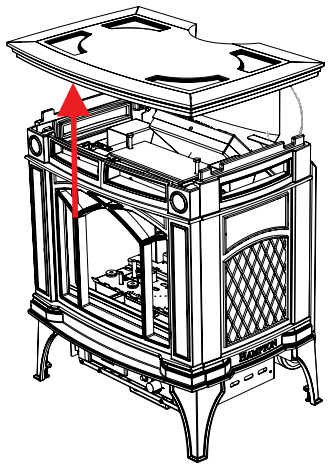

2. Loosen bolts securing cast front–slide light assembly bracket upward to release. See below.

3. Remove one (1) screw to remove bulb housing. See below.

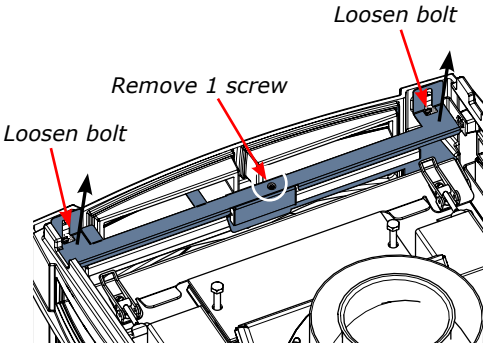

Lift light assy bracket off bolts to install bulb
Remove one screw in location shown

4. Install bulb.

Note: Oils from hands will shorten the life of the bulbs,
do not handle bulbs with bare hands.

5. Reverse steps.

OPTIONAL FAN INSTALLATION

1. Remove the rear access panel on the back of the stove by removing 2 bolts at the bottom of the panel. Lift panel up and away to remove.

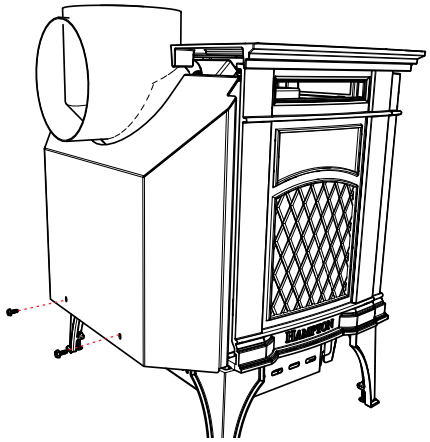



bolt

Lift Rear Panel off of the 2 top bolts.

2. Place a grommet on wiring from fan to be plugged into the IFC and snap into position as shown below.





3. Remove left side access panel (when facing front) by removing one screw.



4. Undo wire clip to release red and black fan wires. Remove cap ends from the wire spades and plug in fan wires - black to black and red to red.





5. Tuck the fan assembly in behind the legs as shown. On either side of the unit there will be slits located on the body of the stove. Slide the fan up into the slits until the mounting holes line up with the holes located on the fan assembly. Secure with one screw per side (leave right side screw loose).

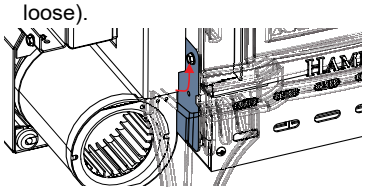



6. Eliminate any slack from fan wire by pulling into the unit and securing with wire clip.



7. Tighten screw on right side.

8. Reinstall back access panel.

9. Plug the fan into the nearest outlet

10. To remove fan - reverse steps.

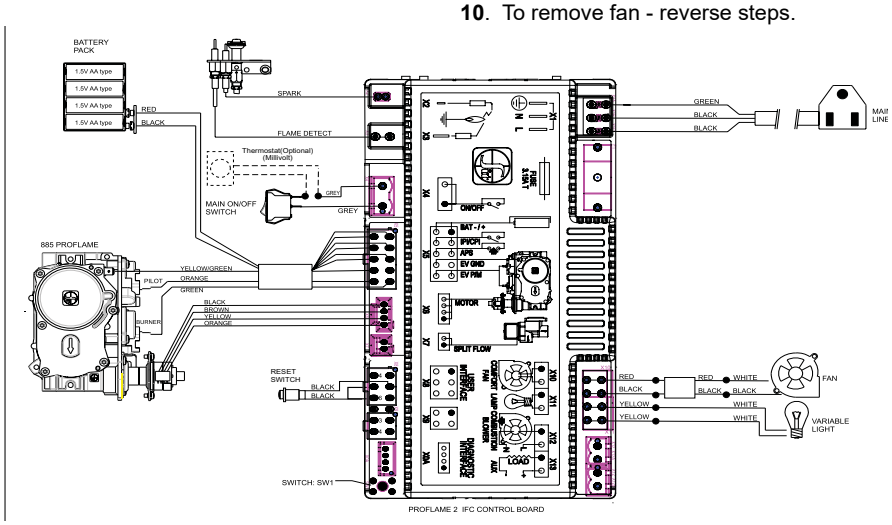

WARNING: Electrical Grounding Instructions

This appliance is equipped with a three pronged (grounding) plug for your protection against shock hazard and should be plugged directly into a properly grounded three-prong receptacle. Do not cut or remove the grounding prong from this plug.

GLASS FRONT REMOVAL / INSTALLATION

1. Turn off stove and allow to return to room temperature.

2. Lift off cast top and place on a soft surface.

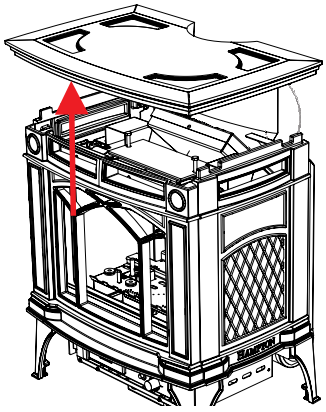

3. Remove 2 bolts and lift off cast front - place front carefully on a soft surface.

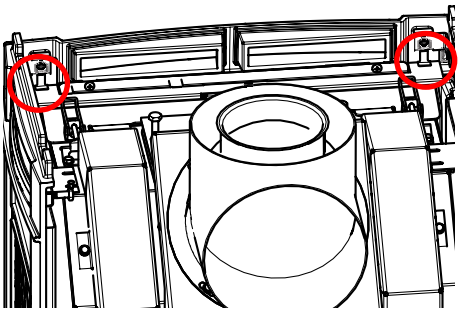

4. Slide the light assembly bracket out of the way.

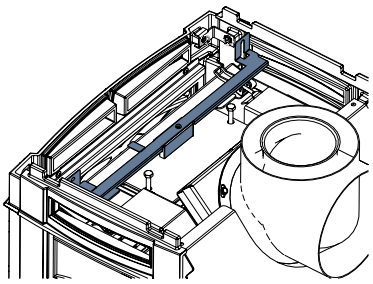

5. Lift both latches securing glass door and remove door.

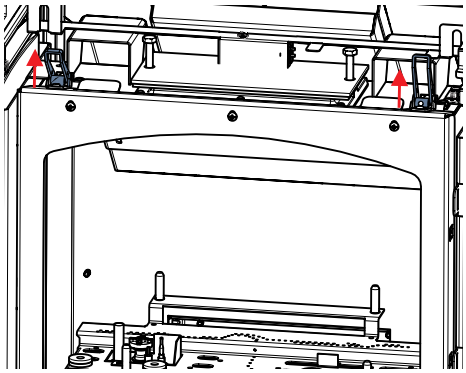

6. To reinstall–reverse steps.

VENTING INTRODUCTION

The Horizontal Termination Kit and the Simpson Dura-Vent Direct Vent venting systems, in combination with the Direct Vent Freestanding Gas Stoves, H15E-NG11, and H15E-LP11, have been tested and listed as direct vent heater systems by Warnock Hersey.

These units use the "balanced flue" technology Co-Axial system. The inner liner vents products of combustion to the outside while the outer pipe draws outside combustion air into the combustion chamber thereby eliminating the need to use heated room air for combustion and losing warm room air up the chimney.

Note: These flue pipes must not be connected to any other appliance.

The gas appliance and vent system must be vented directly to the outside of the building, and never be attached to a chimney serving a separate solid fuel or gas burning appliance. Each direct vent gas appliance must use it's own separate vent system. Common vent systems are prohibited.

IMPORTANT

Read all instructions carefully before starting the installation. Failure to follow these instructions may create a fire or other safety hazard, and will void the warranty. Be sure to check the venting and clearance to combustible requirements. Consult your local building codes before beginning installation.

The location of the termination cap must conform to the requirements in the "Exterior Vent Terminal Locations" section.

INSTALLATION PRECAUTIONS

These venting systems are engineered products that have been designed and tested for use with the H15E-NG11, and H15E-LP11. The warranty will be voided and serious fire, health or other safety hazards may result from any of the following actions:

1) Installation of any damaged Rigid Pipe component.

2) Unauthorized modification of any Rigid Pipe System.

3) Installation other than as instructed by Simpson Dura-Vent and FPI Fireplace Products International Ltd.

Warning: Always maintain required clearances (air spaces) to nearby combustibles to prevent a fire hazard. Do not fill air spaces with insulation.

Be sure to check the vent termination clearance requirements from decks, windows, soffits, gas regulators, air supply inlets and public walkways as specified in the "Exterior Vent Terminal Locations" section and in your local building codes.

The gas appliance and vent system must be vented directly to the outside of the building, and never be attached to a chimney serving a separate solid fuel or gas-burning appliance. Each direct vent gas appliance must use it's own separate vent system. Common vent systems are prohibited.

SAFETY PRECAUTIONS FOR THE INSTALLER

1) Wear gloves and safety glasses for protection.

2) Exercise extreme caution when using ladders or on roof tops.

3) Be aware of electrical wiring locations in walls and ceilings.

VENT RESTRICTOR POSITION

To set the Vent restriction as indicated in the Venting Arrangement diagrams in the "Rigid Pipe Venting System" section, simply loosen the screws and push the vent restrictor plate to the correct position. Tighten the screws. This will be located inside the firebox.

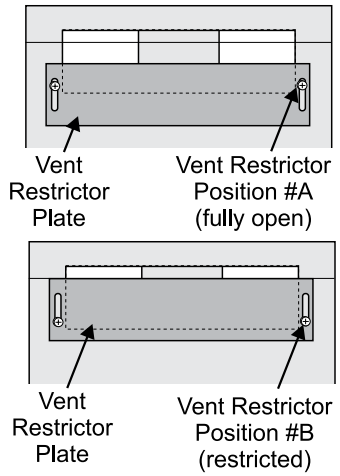

ROTATING ELBOW

1) Remove top casting.

2) Remove all 4 screws that secure the elbow to the unit using a 1/4" magnetic nut driver.

Remove all 4 screws and washers



3) Rotate the elbow 180°

4) Secure the elbow by securing it with the 4 screws.



EXTERIOR VENT TERMINAL LOCATIONS

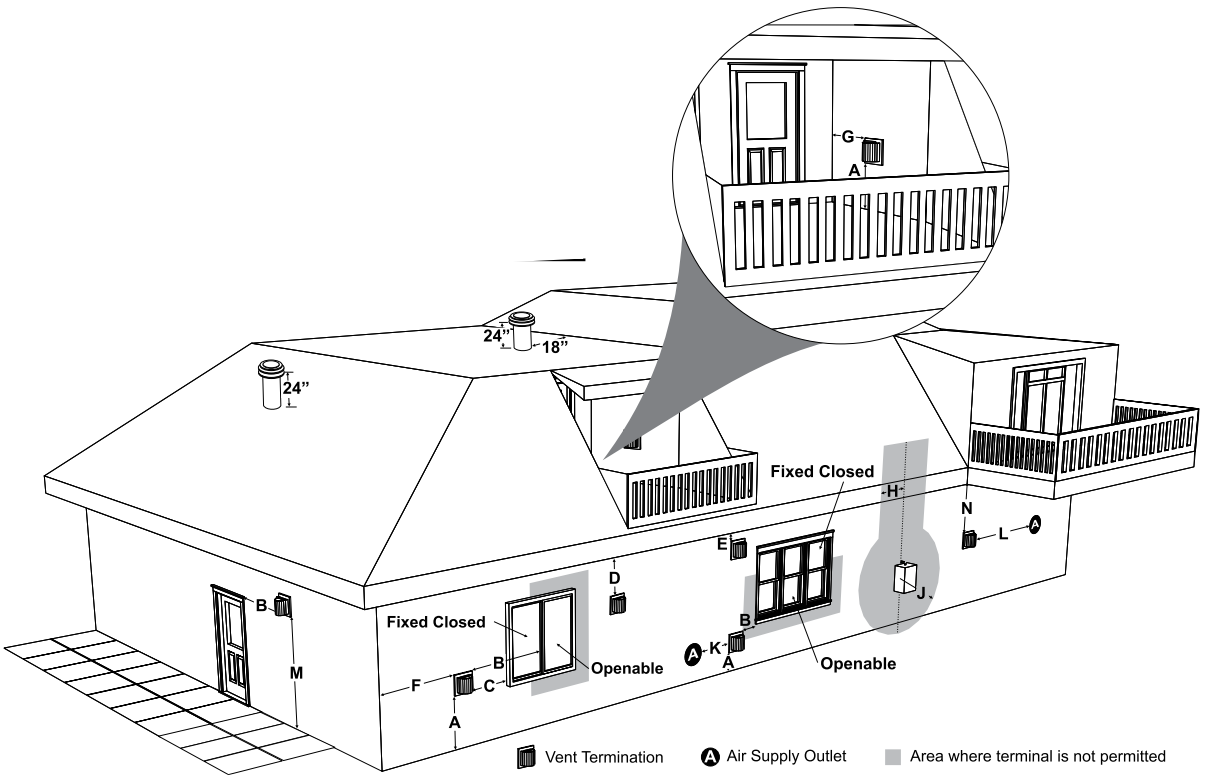

	Minimum Clearance Requirements	Canada[1]	USA[2]
A	Clearance above grade, veranda, porch, deck, or balcony	12" (30cm)	12" (30cm)
B	Clearance to window or door that may be opened	12" (30cm)	9" (23cm)
C	Clearance to permanently closed window	*	*
D	Vertical clearance to ventilated soffit located above the terminal within a horizontal distance of 2 feet (61cm) from the center line of the terminal (check with the local code)	22" (56cm)	22" (56cm)
E	Clearance to unventilated soffit	12"(30cm)	12"(30cm)
F	Clearance to outside corner: with ***AstroCap*** and Vent Riser Termination Cap	6"(15cm)	6"(15cm)
	Clearance to outside corner: with all other approved Termination Caps.	12"(30cm)	12"(30cm)
G	Clearance to inside corner: with ***AstroCap*** and Vent Riser Termination Cap	6"(15cm)	6"(15cm)
	Clearance to inside corner: with all other approved Termination Caps	12"(30cm)	12"(30cm)
H	Clearance to each side of center line extended above meter/regulator assembly	36"(90cm)[a]	*
J	Clearance to service regulator vent outlet	36"(90cm)	*
K	Clearance to non-mechanical air supply inlet to building or the combustion air inlet to any other appliance	12"(30cm)	9" (23cm)
L	Clearance to a mechanical air supply inlet #3' (91cm) above if within 10' (3m) horizontally	72"(1.8m)	36"(90cm)[b]
M	Clearance above paved sidewalk or a paved driveway located on public property‡	84"(2.1m)‡	*
N	Clearance under veranda, porch, deck, or balcony‡	12"(30cm)‡	*

1 In accordance with current CSA B149.1, Natural Gas and Propane Installation Code
2 In accordance with the current ANSI Z223.1/NFPA 54, National Fuel Gas Code
A vent shall not terminate directly above a sidewalk or paved driveway which is located between two single family dwellings and serves both dwellings.
‡ Permitted only if veranda, porch, deck, or balcony is fully open on a minimum of two sides beneath the floor.
* Clearance in accordance with local installation codes and the requirements of the gas supplier
a 3 feet (91cm) within a height of 15 feet (4.5m) above the meter / regulator assembly
b 3 feet (91cm) above - if within 10 feet (3m) horizontally

4" X 6-5/8" RIGID PIPE CROSS REFERENCE CHART

Components from different Manufacturers may not be mixed. Not All Rigid Pipe components are available directly from FPI.

Description	Simpson Direct Vent Pro®	*Selkirk Direct Temp™	*American Metal Products® Amerivent Direct	*Metal-Fab™ Sure Seal	*Security Secure- Vent®	*ICC Excel Direct	*Olympia Ventis DV***
6" Pipe Length-Galvanized	46DVA-06	4DT-6	N/A	4D6	SV4L6	TC-4DL6	VDV-0406
6" Pipe Length-Black	46DVA-06B	4DT-6B	N/A	4D6B	SV4LB6	TC-4DL6B	VDVB-0406
7" Pipe Length-Galvanized	N/A	N/A	4D7	N/A	N/A	N/A	N/A
7" Pipe Length-Black	N/A	N/A	4D7B	N/A	N/A	N/A	N/A
9" Pipe Length-Galvanized	46DVA-09	4DT-9	N/A	N/A	N/A	TC-4DL9	VDV-0409
9" Pipe Length-Black	46DVA-09B	4DT-9B	N/A	N/A	N/A	TC-4DL9B	VDVB-0409
12" Pipe Length-Galvanized	46DVA-12	4DT-12	4D12	4D12	SV4L12	TC-4DL1	VDV-0412
12" Pipe Length-Black	46DVA-12B	4DT-12B	4D12B	4D12B	SV4LB12	TC-4DL1B	VDVB-0412
18" Pipe Length-Galvanized	46DVA-18	4DT-18	4D18	4D18	SV4LA	TC-4DL18	VDV-0418
18" Pipe Length-Black	46DVA-18B	4DT-18B	4D18B	4D18B	SV4LA	TC-4DL18B	VDVB-0418
24" Pipe Length-Galvanized	46DVA-24	4DT-24	4D24	4D24	SV4L24	TC-4DL2	VDV-0424
24" Pipe Length-Black	46DVA-24B	4DT-24B	4D24B	4D24B	SV4LB24	TC-4DL2B	VDVB-0424
36" Pipe Length-Galvanized	46DVA-36	4DT-36	4D36	4D36	SV4L36	TC-4DL3	VDV-0436
36" Pipe Length-Black	46DVA-36B	4DT-36B	4D36B	4D36B	SV4LB36	TC-4DL3B	VDVCB-0436
48" Pipe Length-Galvanized	46DVA-48	4DT-48	4D48	4D48	SV4L48	TC-4DL4	VDV-0448
48" Pipe Length-Black	46DVA-48B	4DT-48B	4D48B	4D48B	SV4LB48	TC-4DL4B	VDVB-0448
60" Pipe Length-Galvanized	46DVA-60	4DT-60	N/A	N/A	N/A	N/A	N/A
60" Pipe Length-Black	46DVA-60B	4DT-60B	N/A	N/A	N/A	N/A	N/A
Adjustable Length 3"-10"-Galvanized	N/A	N/A	N/A	4DAL	N/A	TC-4DLT	N/A
Adjustable Length 3"-10"-Black	N/A	N/A	N/A	4DALB	N/A	TC-4DLTB	N/A
Adjustable Length 7)-Galvanized	N/A	N/A	4D7A	N/A	N/A	N/A	N/A
Adjustable Length 7"-Black	N/A	N/A	4D7AB	N/A	N/A	N/A	N/A
Extension Pipe 8-1/2"-Galvanized	46DVA-08A	N/A	N/A	N/A	N/A	N/A	N/A
Extension Pipe 8-1/2"-Black	46DVA-08AB	N/A	N/A	N/A	N/A	N/A	N/A
Adjustable Length 12"-Galvanized	N/A	N/A	4D12A	N/A	SV4LA12	TC-4dLSI	N/A
Adjustable Length 12"-Black	N/A	N/A	4D12A	N/A	SV4LBA12	TC-4dLSIB	N/A
Extension Pipe 16"-Galvanized	46DVA-16A	N/A	N/A	N/A	N/A	N/A	N/A
Extension Pipe 16"-Black	46DVA-16AB	N/A	N/A	N/A	N/A	N/A	N/A
45º Elbow-Galvanized	46DVA-E45	4DT-EL45	4D45L	N/A	N/A	TE-4DE45	VDV-EL0445
45º Elbow-Black	46DVA-E45B	4DT-EL45B	4DT-EL45B	N/A	N/A	TE-4DE45B	VDVB-EL0445
45º Elbow Swivel-Galvanized	See 46DVA-E45	N/A	N/A	4D45L	SV4E45	N/A	N/A
45º Elbow Swivel-Black	See 46DVA-E45B	N/A	N/A	4D45LB	SV4EB45	N/A	N/A
90º Elbow-Galvanized	46DVA-E90	4DT-EL90S	4DT-EL90S	N/A	N/A	TE-4DE90	VDV-EL0445
90º Elbow-Black	46DVA-E90B	4DT-EL90SB	4DT-EL90SB	N/A	SV4EBR90-1	TE-4DE90B	VDVB-EL0445
90º Elbow, Swivel-Galvanized	See 46DVA-E90	N/A	N/A	4D90L	SV4E90-1	N/A	N/A
90º Elbow, Swivel-Black	See 46DVA-E90B	N/A	N/A	4D90LB	wSV4EB90-1	N/A	N/A
90º Starter Elbow, Swivel-Galvanized	N/A	N/A	N/A	4D90A	N/A	N/A	N/A
Adaptor*	N/A	N/A	N/A	4D90L	N/A	N/A	VDV-UAA04
Ceiling Support	N/A	4DT-CS	4DSP	4DFSP	SV4SD	TM4-RDS	VDV-SCR04
Cathedral Support Box	46DVA-CS	4DT-CSS	4DRSB	4DRS	SV4CSB	TM4-SDS	VDV-CSS04
Wall Support/Band	46DVA-WS	4DT-WS/B	4DWS	4DWS	SV4BM	TM-SWS	VDV-WS04
Offset Support	46DVA-ES	4DT-OS	N/A	N/A	SV4SU	TM-SOS	N/A
Wall Thimble-Black	46DVA-WT	4DT-WT	4DWT	4DWT	SV4RSM	N/A	VDV-WPT04
Wall Thimble Cover/Ceiling Support	46DVA-DC	N/A	N/A	N/A	SV4PF	N/A	N/A
Firestop Spacer	46DVA-FS	4DT-FS	4DFSP	4DFS	SV4BF	TM-4CS	VDV-FS04
Trim Plate-Black	N/A	4DT-TP	4DFPB	4DcP	SV4LA	TM-4TP	VDV-WTC04

* Not available from Regency

Description	Simpson Direct Vent Pro®	*Selkirk Direct Temp™	*American Metal Products® Amerivent Direct	*Metal-Fab™ Sure Seal	*Security Secure- Vent®	*ICC Excel Direct	*Olympia Ventis DV***
Attic Insulation Shield 12"	46DVA-IS	N/A	4DAIS12	4DIS	SV4RSA	N/A	VDV-AIS04
Attic Insulation Shield - Cold Climates 36"	N/A	N/A	4DAIS12	N/A	N/A	TM-4AS	N/A
Basic Horizontal Termination Kit (A)	46DVA-KHA	4DT-HKA	4DHTK2	4DHTKA	SV-SHK	TM4-HTK	VDV-KW04
Horizontal Termination Kit (B)	N/A	4DT-HKB	4DHTK1	4DHTKB	SV-HK	TM4-HTK	VDV-K04
Vertical Termination Kit	N/A	4DT-VKC	4DHTK	4DHTK	SV-FK	N/A	N/A
High Wind Vertical Cap	46DVA-VCH	4DT-VC	N/A	N/A	N/A	TM-4VT	VDV-VCHW04
High Wind Horizontal Cap	N/A	N/A	N/A	N/A	N/A	TM-4DHT	N/A
Horizontal Square Termination Cap	46DVA-HC	4DT-HHC	4DHC	4DHT	SV4CHC	TM-4HT	VDV-HC04
Vertical Termination Cap	46DVA-VC	4DT-HVC	4DVC	4DVT	SV4CGV	N/A	N/A
Storm Collar	46DVA-SC	4DT-SC	4DSC	4DSC	SV4FC	TM-SC	VDV-SC04
Flashing - Flat Roof	46DVA-FF	N/A	N/A	N/A	N/A	N/A	N/A
Adjustable Flashing 0/12-6/12	46DVA-F6	4DT-AF6	4D12S	4DF	SV4STC14	TF-4FA	VDV-F0406
Adjustable Flashing 6/12-12/12	46DVA-F12	4DT-AF12	4D36S	4DF-12	SV4STC36	TF-4FB	VDV-SSO
Vinyl Siding Standoff	46DVA-VSS	4DT-VS	N/A	4DVS	SV4VS	TM-VSS	N/A
Vinyl Siding Shield Plate	N/A	4DT-VSP	N/A	N/A	SV4VS	N/A	N/A
Snorkel Termination 14”	46DVA-SNK14	4DT-ST14	N/A	N/A	N/A	TM-4ST14	N/A
Snorkel Termination 36”	*46DVA-SNK36	4DT-ST36	N/A	N/A	N/A	TM-4ST36	N/A
Wall Firestop	46DVA-WFS	N/A	N/A	N/A	N/A	TM-4TR	VDV-FS04

* Not available from Regency

FPI			
946-506/P	Vent Guard (Optional) for AstroCap	946-205	Vinyl Siding Shield for Riser Vent Terminal
**510-994	Rigid Pipe Adaptor (Must use with all rigid piping)	946-208/P	Vent Guard (Optional) for Riser Vent Terminal
640-530/P	Riser Vent Terminal	946-523/P	AstroCap Horizontal Cap
		946-206	Vinyl Siding Standoff for AstroCap

**The rigid pipe adaptor is not required on the C34, C34E, U39, U39E, H15, H27, H35 & RC500E.
Note: When using Metal-Fab Sure Seal Rigid Piping - please note that the Adaptor (4DDA) must be used in conjunction with FPI Rigid Pipe Adaptor (510-994).

Offset Pipe Selection: Use this table to determine offset pipe lengths.

Pipe Length (L)	4” x 6-5/8” Venting	
	Run (X)	Rise (Y)
0” (0mm)	4-7/8” (124mm)	13-7/8” (340mm)
6” (152mm)	8” (203mm)	16-1/2” (419mm)
9” (229mm)	10-1/8” (257mm)	18-5/8” (473mm)
12” (305mm)	12-1/4” (311mm)	20-3/4” (527mm)
24” (610mm)	20-5/8” (524mm)	29-1/8” (740mm)
36” (914mm)	29” (737mm)	37-1/2” (953mm)
48” (1219mm)	37-7/16” (951mm)	45-15/16” (1167mm)

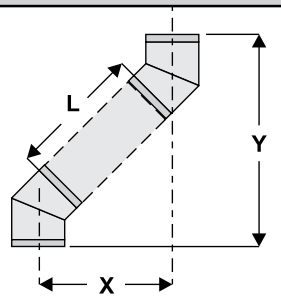

For specific instructions on venting components - visit the manufacturers website listed below.

- Simpson Direct Vent Pro: www.duravent.com
- Selkirk Direct-Temp: www.selkirkcorp.com
- American Metal Products: www.americanmetalproducts.com
- Metal-Fab Sure Seal: www.mtlfab.com
- Security Secure Vent: www.securitychimneys.com
- Industrial Chimney Company: www.icc-rsf.com
- Olympia Ventis DV: www.olympiachimney.com

Note: Horizontal runs of vent must be level, or have a 1/4” rise for every 1 foot of run towards the termination.
Never allow the vent to run downward - this could cause high temperatures and may present a possible fire hazard.

Olympia Ventis DV: www.olympiachimney.com

RIGID PIPE VENTING SYSTEMS

Horizontal or Vertical Terminations

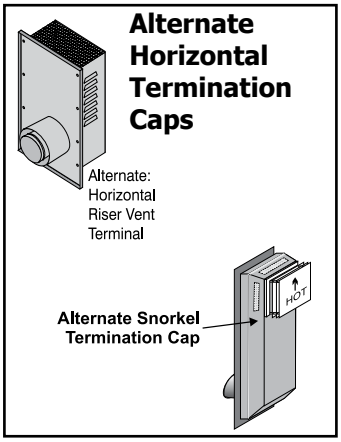

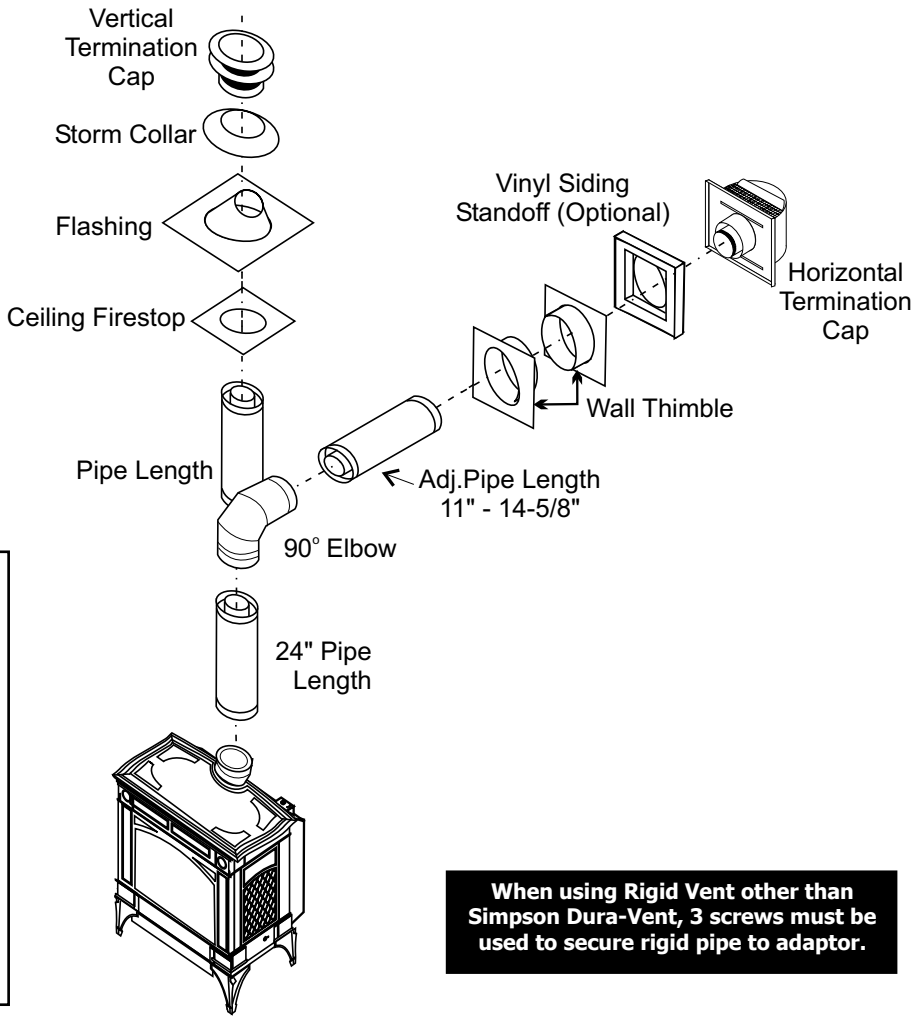

WARNING:

Do not combine venting components from different venting systems.

However use of the the AstroCap™ and FPI Riser is acceptable with all systems.

This product has been evaluated by Intertek for using a Rigid Pipe Adaptor in conjunction with Duravent Direct-Vent, Selkirk Direct-Temp, Ameri Vent Direct venting and Security Secure Vent systems. Use of these systems with the Rigid Pipe adaptor is deemed acceptable and does not affect the Intertek WHI listing of components.

When using Rigid Vent other than Simpson Dura-Vent, 3 screws must be used to secure rigid pipe to adaptor.

The FPI AstroCap™ and FPI Riser Vent terminal are certified for installations using FPI venting systems as well as Simpson Dura-Vent® Direct Vent, American Metal Products Ameri Vent Direct Vent, Security Secure Vent®, Selkirk Direct-Temp. AstroCap™ is a proprietary trademark of FPI Fireplace Products International Ltd. Dura-Vent® and Direct Vent are registered and/or proprietary trademarks of Simpson Dura-Vent Co. Inc.

Horizontal Venting with Two (2) 90° Elbows

One 90° elbow = Two 45° elbows.

Option	V	H + H1
A)	1' Min.	3' Max.
B)	2' Min.	4' Max.
C)	3' Min.	5' Max.
D)	4' Min.	6' Max.
E)	5' Min.	7' Max.
F)	6' Min.	8' Max.

With these options, maximum total pipe length is 30 feet with minimum of 6 feet total vertical and maximum 8 feet total horizontal. ***Please note minimum 1 foot between 90° elbows is required.***

Lengths do not include elbow indicated

Vent restrictor position A (fully open), refer to the "Vent Restrictor Postion" section.

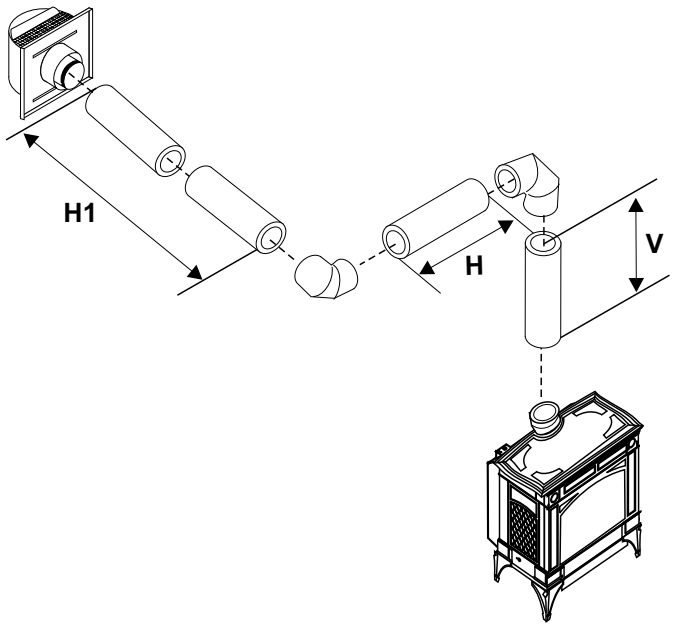

Horizontal Venting with Two (2) 90° Elbows

One 90° elbow = Two 45° elbows.

Option	H	V	H + H1
A)	1' Max.	1' Min.	3' Max.
B)	2' Max.	2' Min.	5' Max.
C)	3' Max.	4' Min.	6' Max.
D)	4' Max.	6' Min.	7' Max.
E)	5' Max.	8' Min.	8' Max.

With these options, max. total pipe length is 30 feet with min. of 8 feet total vertical and max. 8 feet total horizontal. ***Please note min. 1 foot between 90° elbows is required.***

Lengths do not include elbow indicated

Vent restrictor position A (fully open), refer to the "Vent Restrictor Postion" section.

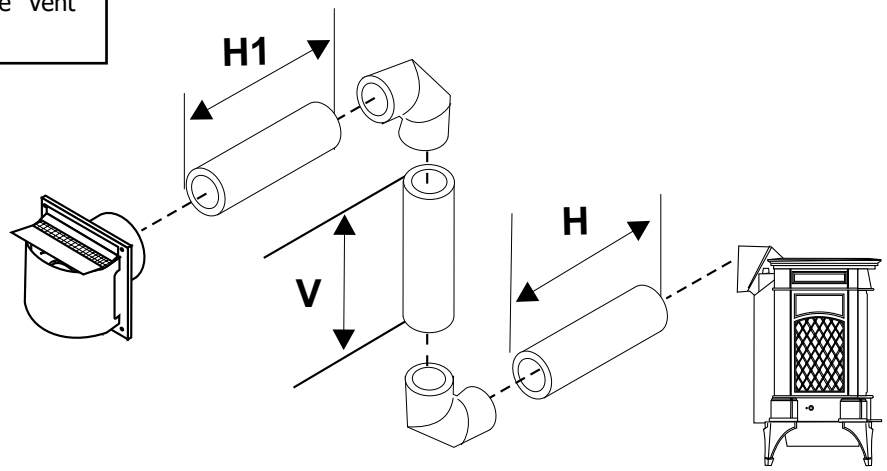

Vertical Venting with Two (2) 90° Elbows

One 90° elbow = Two 45° elbow				
Option	**V**	**H**	**V + V1**	With these options, maximum total pipe length is 30 feet with minimum of 6 feet total vertical and maximum 8 feet total horizontal. ***Please note minimum 1 foot between 90° elbows is required.***
A)	1' Min.	4' Max.	2' Min.	
B)	2' Min.	5' Max.	3' Min.	
C)	3' Min.	6' Max.	4' Min.	
D)	4' Min.	7' Max.	5' Min.	
E)	5' Min.	8' Max.	6' Min.	
Lengths do not include elbow indicated.				
Vent restrictor position A (fully open), refer to the "Vent Restrictor Position" section.				

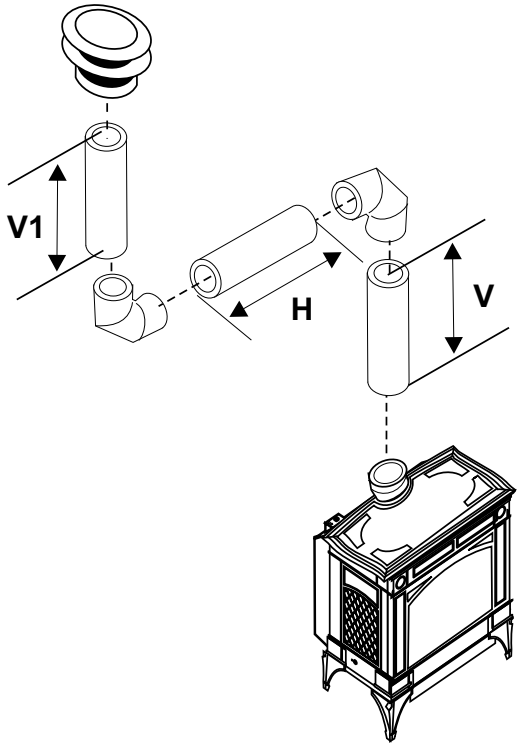

Vertical Venting with Two (2) 90° Elbows

One 90° elbow = Two 45° elbow			
Option	**H + H1**	**V**	With these options, maximum total pipe length is 30 feet with minimum of 6 feet total vertical and maximum 6 feet total horizontal. ***Please note minimum 1 foot between 90° elbows is required.***
A)	2' Max.	2' Min.	
B)	3' Max.	3' Min.	
C)	4' Max.	4' Min.	
D)	5' Max.	5' Min.	
E)	6' Max.	6' Min.	
Lengths do not include elbow indicated.			
Vent restrictor position A (fully open), refer to the "Vent Restrictor Position" section.			

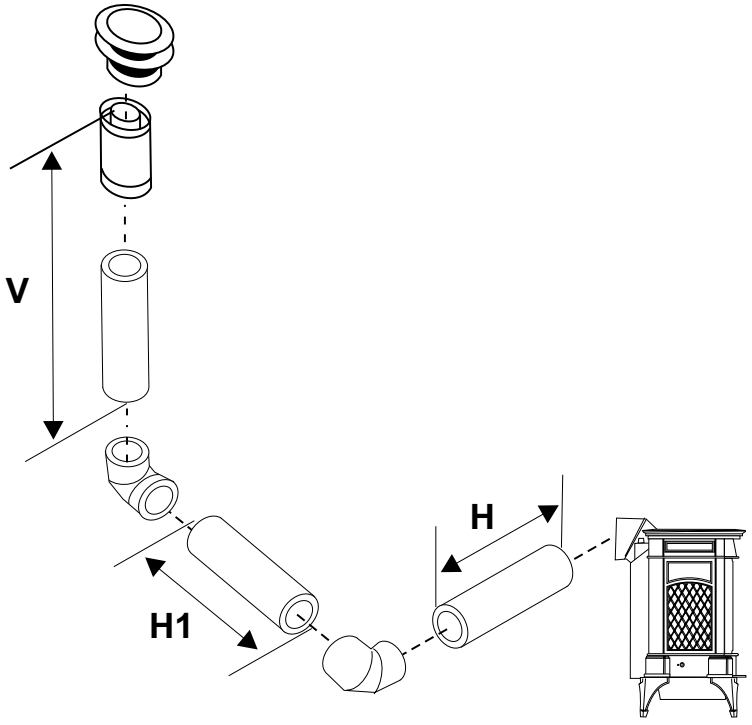

VENTING ARRANGEMENTS

Horizontal Terminations for All Venting Systems

The shaded areas in the diagram below show all allowable combinations of vertical runs with horizontal terminations. Maximum one 90° elbow (two 45° elbows equal one 90° elbow).

Propane and Natural Gas: Residential, Manufactured and Mobile Homes Installations

May be installed in Manufactured (Mobile) Homes after first sale.

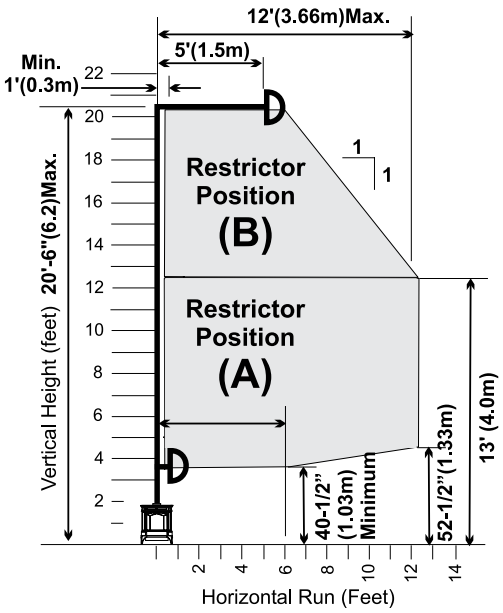

Refer to the "Vent Restrictor Position" section in this manual for set up.
Vent restrictor position A (fully open)
Vent restrictor position B (restricted)

Vertical Terminations Systems for Residential Manufactured and Mobile Homes

The shaded area in the diagram below shows all allowable combinations of straight vertical and offset to vertical runs with vertical terminations. Maximum two 45° elbows.

If the vent is ENCLOSED in a chase (min. size 9" x 9") maintain a 1-1/4" clearance to combustibles.
May be installed in Manufactured (Mobile) Homes after first sale.

Offset to Vertical Terminations

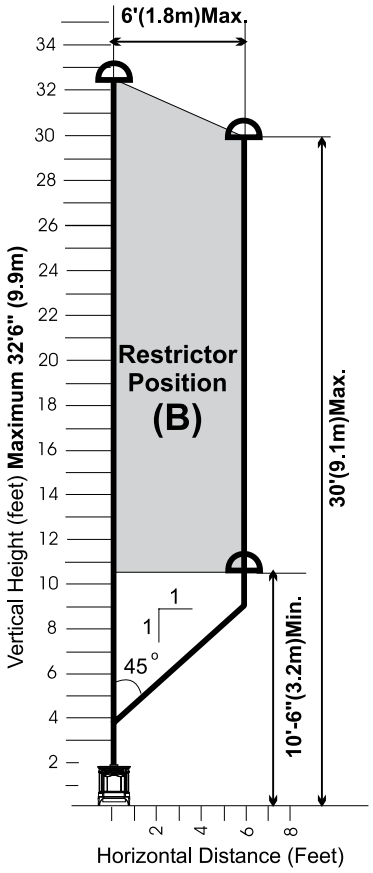

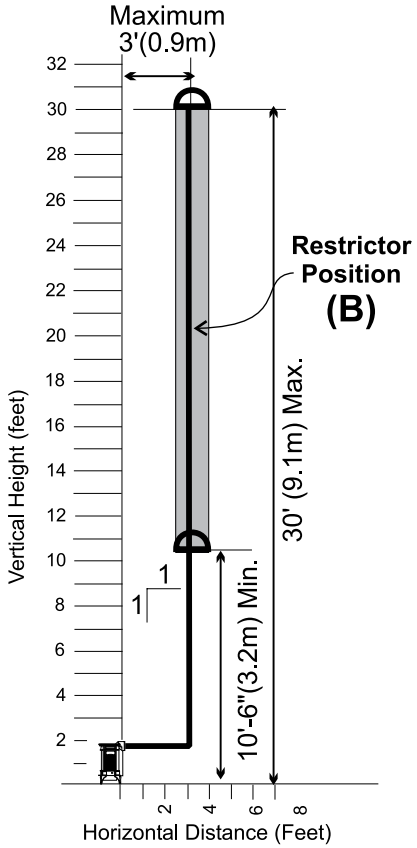

Venting Arrangements - Horizontal Terminations

The two diagrams show all allowable combinations of straight horizontal termination with one 45° elbow off the unit. Restrictor position "A".

12" max. w/AstroCap or Simpson Duravent Horizontal Square Termination Cap.

24" max. w/FPI Riser or Snorkel Termination Cap.

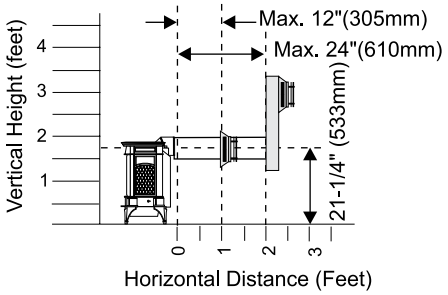

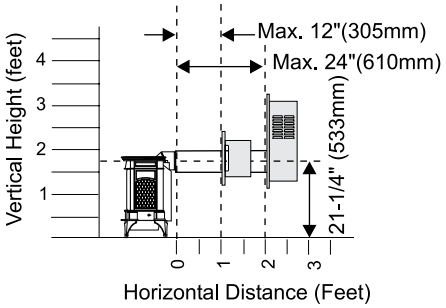

VERTICAL TERMINATION WITH CO-LINEAR FLEX SYSTEM

THE APPLIANCE MUST NOT BE CONNECTED TO A CHIMNEY FLUE SERVING A SEPARATE SOLID FUEL BURNING APPLIANCE.

This appliance is designed to be attached to two 3" (76mm) co-linear aluminium flex running the full length of the chimney. See the Venting Arrangements chart below for minimum and maximum flue lengths. See chart below for minimum distances from roof. Periodically check that the vent is unrestricted.

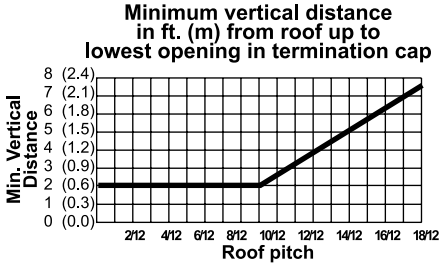

Masonry chimneys may take various contours which the flexible liner will accommodate. However, **keep the flexible liner as straight as possible**, avoid unnecessary bending.

The Air Intake pipe must be attached to the inlet air collar of the termination cap.

Required Parts:

Part #	Description
946-529	Co-linear DV Vertical Termination Cap
948-305	3" Flex - 35 ft.
946-563	Co-Axial to Co-Linear Adapter Kit which contains the following: Co-linear Flex Adapter (270-585) Outer Pipe (946-257) Inner Pipe Adapter (946-219)

Alternate Approved Caps

46DVA-VC	Vertical Termination Cap
46DVA-VCH	High Wind Cap
46DVA-GK	3" Co-linear Adapter with flashing

Venting Arrangements - Vertical Terminations with Co-linear Flex System for both Residential & Manufactured Homes into Masonry Fireplaces

The shaded area in the diagram shows the allowable vertical terminations.

Straight Vertical Terminations

Vent Restrictors set at fully closed, Position "B"

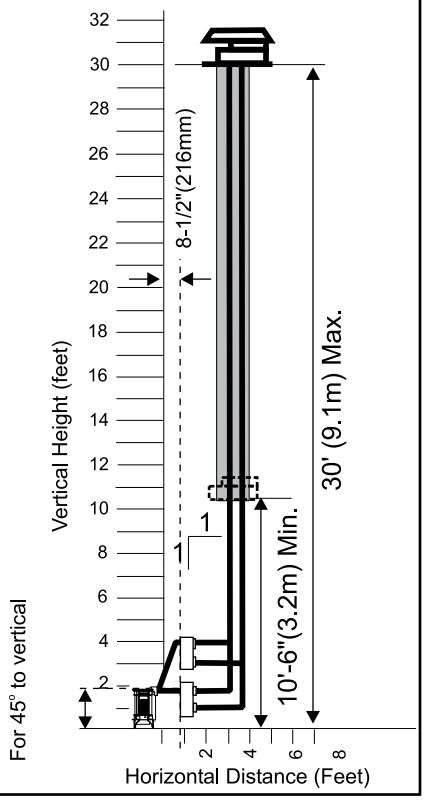

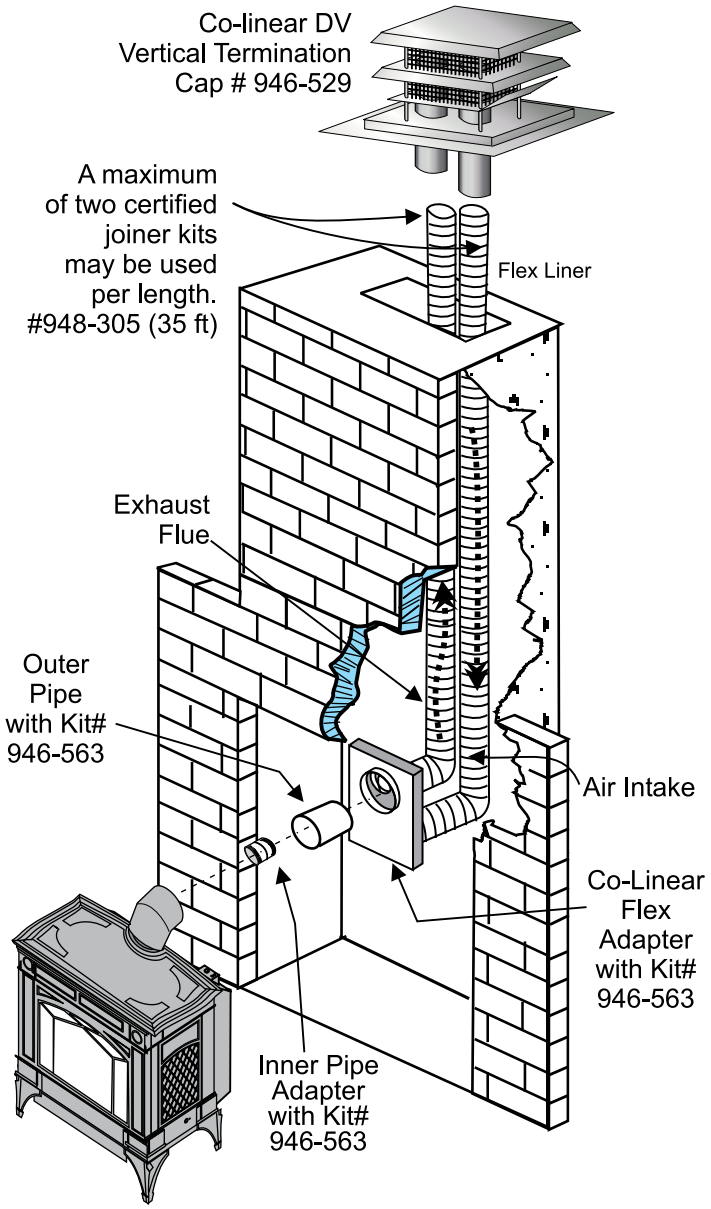

DV STOVE HORIZONTAL VENT KIT

DV 2 ft. Stove Vent Kit (Part # 946-116) and DV 4 ft. Stove Vent Kit (946-216) includes all the parts needed to install the H15-10 Direct Vent unit with up & out horizontal and vertical vent dimensions. For installations that require longer vertical and/or horizontal vents use the Dura-Vent system as shown in the "Dura-Vent Termination Kit" and "Dura-Vent Venting Components" sections.

	Qty.	Description
1)	1	Rigid Pipe Section (Kit # 946-116: 2 ft. (1.2m) length, Kit # 946-216: 4 ft. (1.2m) length), 6-1/2" (165mm) inside diameter
2)	1	Flex Liner, compressed aluminium 2 ply liner, 4" (102mm) inside diameter
3)	4	spring spacers
4)	1	90 deg. Elbow
5)	1	Adjustable pipe section 13-1/2" to 24" (343mm x 610mm), 2 pcs.
6)	1	Thimble Cover
7)	1	Wall Thimble (2 pcs.)
8)	1	Adapter
9)	1	***AstroCap*** Termination Cap
10)	2	Trim Collars
11)	1	tube of Mill-Pac, high temperature sealant
12)	12	Screws, #8 x 1/2" Self tapping, Stainless Steel
13)	14	Screws, #8 x 1/2" Self tapping, Black
14)	4	Screws #8 x 1-1/2" Drill Point, Black
15)	4	Screws #8 x 1-1/2" Drill Point, Stainless Steel
16)	8	Wood screws #8 x 1"

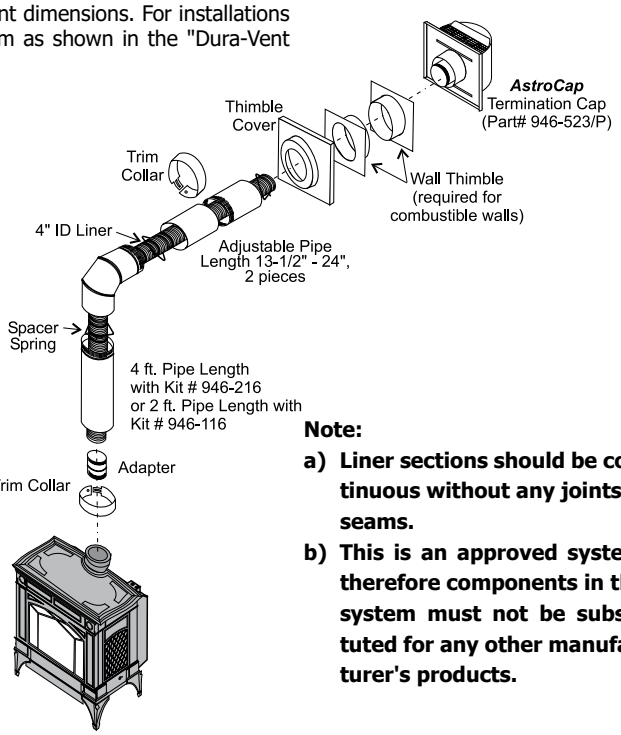

Note:

a) Liner sections should be continuous without any joints or seams.

b) This is an approved system, therefore components in this system must not be substituted for any other manufacturer's products.

DV STOVE HORIZONTAL VENT KIT (#946-116 & #946-216) INSTALLATION

Review the following sequence of instructions which are typical of most installations. The sequence may vary depending on wall thickness. **Refer to the "Exterior Vent Terminal Locations" and "Rigid Pipe Venting Systems" sections for vent location and clearance dimensions, and the "Vent Restrictor Position" for the correct positioning.**

1) Set the unit in its desired location. Check to determine if wall studs will be in the way of the venting system, adjust location until all clearances are met and there are no obstructions.

Note: A 1-1/2"(38mm) clearance around the outer pipe must be maintained except that only a 1" (25mm) clearance is needed at the termination end.

IMPORTANT:

Do not locate termination hood where excessive snow or ice buildup may occur. Be sure to check vent termination area after snow falls, and clear to prevent accidental blockage of venting system. When using snow blowers, make sure snow is not directed towards vent termination area.

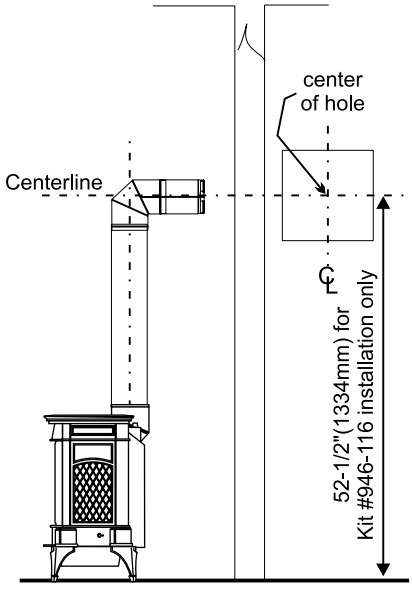

2) Assemble a **trial fit** to determine the vertical center-line for the vent termination.

   a) Cut a 9-1/2" x 9-1/2" (241mm x 241 mm) square hole on both the interior and exterior wall.

b) Install wall thimbles on both interior and exterior wall with 4 wood screws (#8 x 1") per thimble.

c) Attach the 2 piece adjustable pipe section to the vent terminal and slide into position from the exterior. **The larger diameter end of the adjustable pipe goes to the vent terminal.**

d) Install the 90° elbow onto the adjustable pipe to determine the vertical centerline.

Note: if the centerline cannot be met, the adjustable sections will have to be cut.

e) Cut the 4 ft. section of rigid pipe to length. Attach the 45° elbow to the rigid pipe, and ensure that the pipe length when cut (with the 45° elbow) will seat onto both the starter collar and the 90° elbow. **Crimped section of rigid pipe seats into the 90° elbow. Only cut the uncrimped side of pipe.**

Dismantle all pipe sections including vent

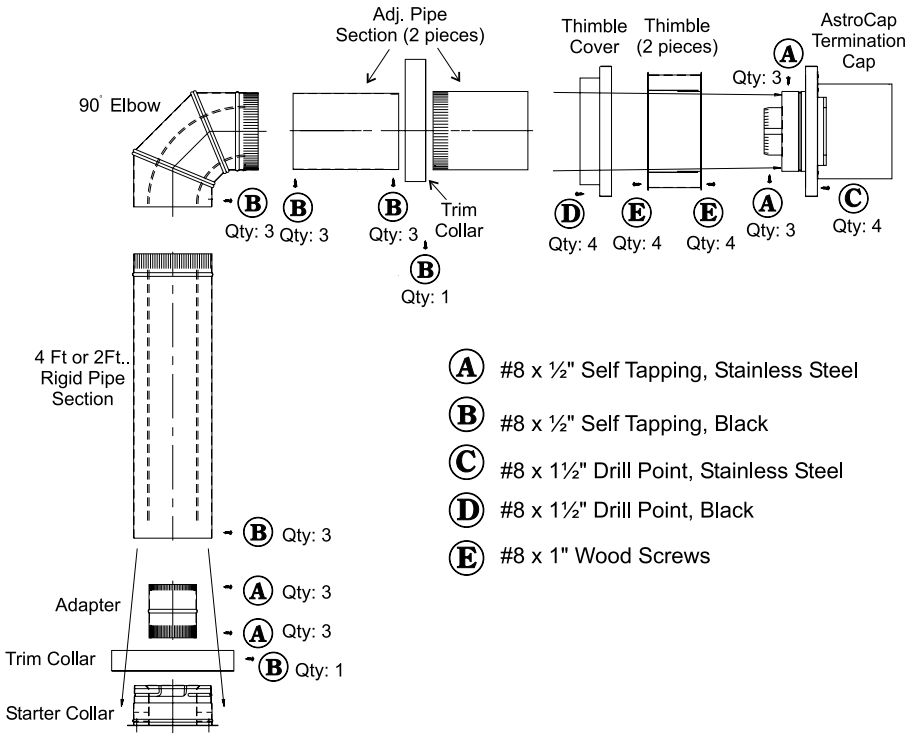

terminal.

3) Attach the 4" dia. flex liner to the vent terminal ensuring that the flex overlaps the collar of the vent terminal by a minimum of 1-3/8"(35mm). Use Mill-Pac to seal and secure with 3 of the #8 x 1/2" screws (stainless steel).

4) Attach the adjustable pipe section to the vent terminal using Mill-Pac and attach with 3 of the #8 x 1/2" screws (stainless steel).

NOTE: For best results and optimum performance with each approved venting system, it is highly recommended to apply "Mill-Pac" sealant (supplied) to every inner pipe connection. Failure to do so may result in drafting or

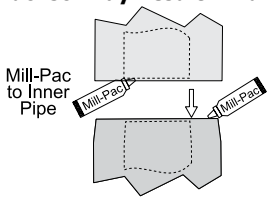

performance issues not covered under warranty.

Note: The pipe seam should be facing down.

Note: To make the installation more aesthetically pleasing, we recommend framing out a square that the cap can be mounted on.

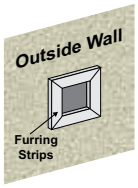

Note: If installing termination on a siding covered wall, a vinyl siding standoff or furring strips must be used to ensure that the termination is not recessed into the siding. For vinyl siding standoff installation refer to the Dura-Vent Termination instructions.

5) Slide the partially connected pipe and vent terminal assembly through the wall thimbles (from the exterior into the interior) and secure the cap to the exterior wall with 4 of the supplied screws (#8 x 1-1/2" drill point, stainless steel). Note: pilot holes will need to be drilled through the wall thimble on all 4 corners.

Note: The four screws provided for the vent cap should be replaced with appropriate fasteners for stucco, brick, concrete, or other types of sidings.

6) A bead of non-hardening mastic should be run around both the termination and vinyl siding standoff to prevent water from entering and to make a tight seal between the cap and the standoff.

7) Stretch the 4" dia. flex liner out fully and get a trial fit of the liner onto the 4" dia. starter collar.

8) Cut the 4" dia. flex liner to the desired size. **Hint:** leave an extra 12" to 16" of length, this will make the final assembly easier to work with.

9) Secure the 4" dia. flex liner to the 4" adapter with Mill-Pac and 3 of the #8 x 1/2" screws (stainless steel).

10) Slide the decorative Thimble Cover over the pipe sections and secure with 4 screws (#8 x 1-1/2" drill point, black) to the wall.

11) Slide the 90° elbow (crimp end up), the 45° elbow and the 4 ft. pipe section (crimp end up) over the 4" dia. flex liner.

12) Install the spring spacers onto the pipe sections.

13) Secure the 4" dia. flex liner with adapter onto the stove collar. Put a bead of Mill-Pac around the appliance adapter and secure with 3 screws (#8 x 1/2, stainless steel).

14) Attach the 45° elbow onto the starter collar by sealing with Mill-Pac securing with 3 of the #8 x 1/2" (black) screws.

15) Attach the pipe section to the 45° elbow by sealing with Mill-Pac securing with 3 of the #8 x 1/2" screws (black). Pipe seams should be facing the wall.

16) Attach the 90° elbow onto the pipe section by sealing with Mill-Pac securing with 3 of the #8 x 1/2" screws (black).

17) Slide the adjustable pipe section onto the 90° elbow. Slide the trim collar over the adjustable pipe sections to cover the joint of the telescopic section. The flex may have to be compressed back in order for the adjustable pipe to properly mate to the elbow. Seal with Mill-Pac secure with 3 of the #8 x 1/2" screws (black). Pipe seams facing down.

18) Install the trim collar over the starter collar and secure with a #8 x 1/2" screw (black).

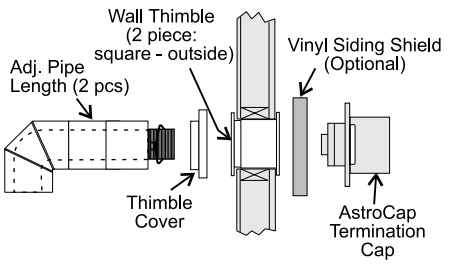

RESIDENTIAL AND MANUFACTURED HOMES / MOBILE HOMES
MINIMUM HORIZONTAL TERMINATION INSTALLATIONS

Planning Your Venting Installation

See the "Exterior Vent Terminal Locations" section for requirements.

When planning your installation, it will be necessary to select the proper length of vent pipe for your particular requirements. Determine the minimum clearance to combustibles from the rear of the unit to the wall. It is also important to note the wall thickness. Before cutting the vent hole through the wall ensure that ALL vent and termination clearances (Refer to the "Exterior Vent Terminal Locations" section) will be met.

*If this is an outside corner, the minimum distance between the vent and the outside corner is 6" (15cm). See "F" on the diagram in the "Exterior Vent Terminal Locations" section.

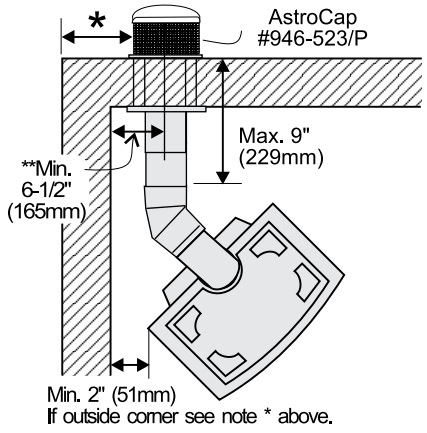

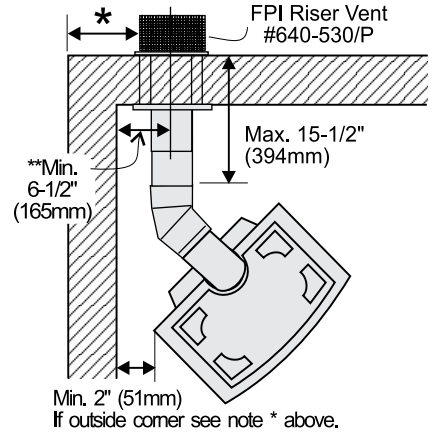

NOTE: Ensure compliance with the outside vent terminal location before cutting hole as both dimensions must be met.

You will require the following components with your new Hampton® Direct Vent Freestanding Gas Stove. Please review your product to make sure you have everything you need. In the event that you are missing any part, contact your dealer. Decorative brass or chrome trim kits are available from Simpson Dura-Vent for their wall thimbles, as well as a square wall thimble cover.

Note: These are the minimum pieces required. Other parts may be required for your particular installation.

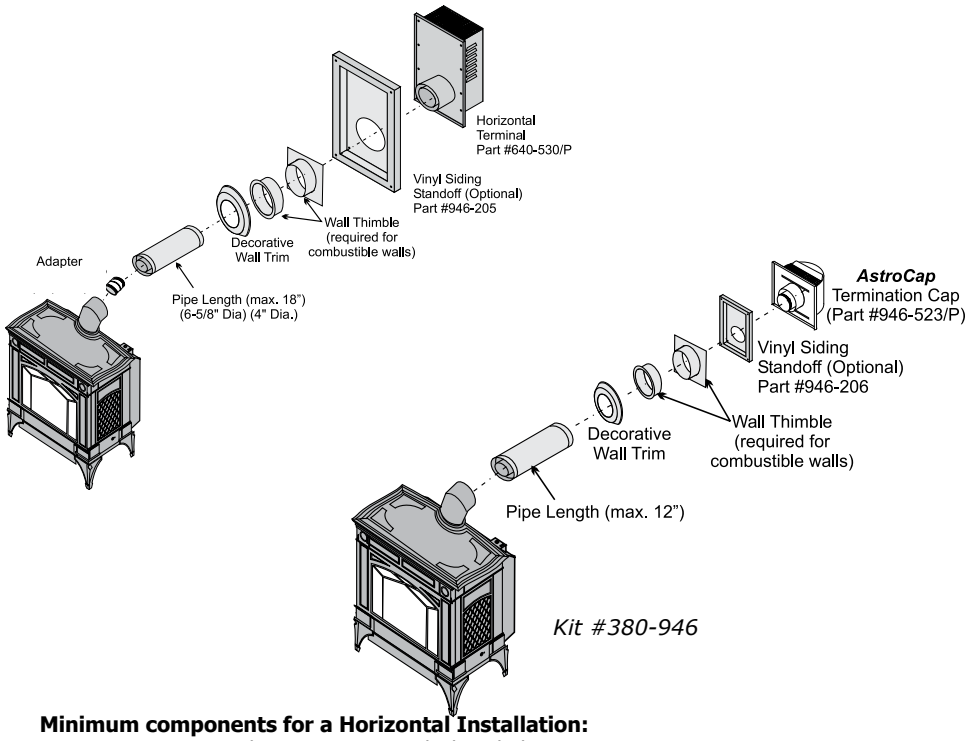

Minimum components for a Horizontal Installation:

946-544	Horizontal Termination Kit which includes:	
1	6-5/8" Dia. x 18" Black Pipe	
1	4" Dia. x 18"	Aluminum Vent
1	946-202	Wall Penetration Heat Shield (Wall Thimble) (2 pcs)
1	640-530/P	Riser Vent Terminal
1	640-545/P	Decorative Wall Trim (Black)
1	948-128	Tube Mill-Pac Screws
1	946-219/P	Pipe Adaptor

380-946	Horizontal Termination Kit which includes:	
1	6-5/8" Dia. x 12" Black Pipe	
1	4" Dia. x 12"	Aluminum Vent
1	946-202	Wall Penetration Heat Shield (Wall Thimble) (2 pcs)
1	946-523/P	AstroCap
1	640-545/P	Decorative Wall Trim (Black)
1	948-128	Tube Mill-Pac Screws

Optional Components:

946-204	45° Elbow - 6-5/8" Black pipe and 4" Aluminum Vent	946-523/P	AstroCap
		946-206	Vinyl Siding Standoff (AstroCap)
946-205	Vinyl Siding Shield for Riser Vent Terminal	946-506/P	Vent Guard (AstroCap)
946-208/P	Vent Guard (Riser Vent Terminal)		
	Square Wall Thimble Cover*		
	Snorkel Termination (36")		
	Snorkel Termination (14")		
	Wall Penetration		
	Heat Shield*		

* Simpson Dura-Vent Components

DURA-VENT TERMINATION KIT

Planning Your Dura-Vent Installation

There are two basic types of Dura-Vent Direct Vent System installations: horizontal termination and vertical termination. Confirm the maximum horizontal run and maximum vertical rise from the diagrams in the "Rigid Pipe Venting Systems" section.

When planning your installation, it will be necessary to select the proper length of vent pipe for your particular requirements. For horizontal installations, determine the minimum clearance from the rear of the unit to the wall. It is also important to note the wall thickness. (The wall thimble is suitable for 2 x 4 or 2 x 6 wall construction.) Select the amount of vertical rise desired for "vertical-to-horizontal" type installations.

Warning: Always maintain required clearances (air spaces) to nearby combustibles to prevent a fire hazard. Do not fill air spaces with insulation.

The minimum clearance requirements between the outer wall of the vent pipe and nearby combustible surfaces is 1-1/4 inch. Be sure to check the vent termination clearance requirements from decks, windows, soffits, gas regulators, air supply inlets and public walkways as specified in the "Exterior Vent Terminal Locations" section and in your local building codes.

To determine the length of vent pipe required for vertical installations, measure the distance from the unit flue outlet to the ceiling, the ceiling thickness, the vertical rise in an attic or second storey, and allow for sufficient vertical height above the roof line.

For multi-storey applications, fire stops are required at each floor level. If an offset is needed, additional pipe, elbows and supports will be required.

Do not exceed the maximum number of elbows. One 90° for horizontal terminations and two 45° for vertical termination.

Dura-Vent Vertical Termination Installation

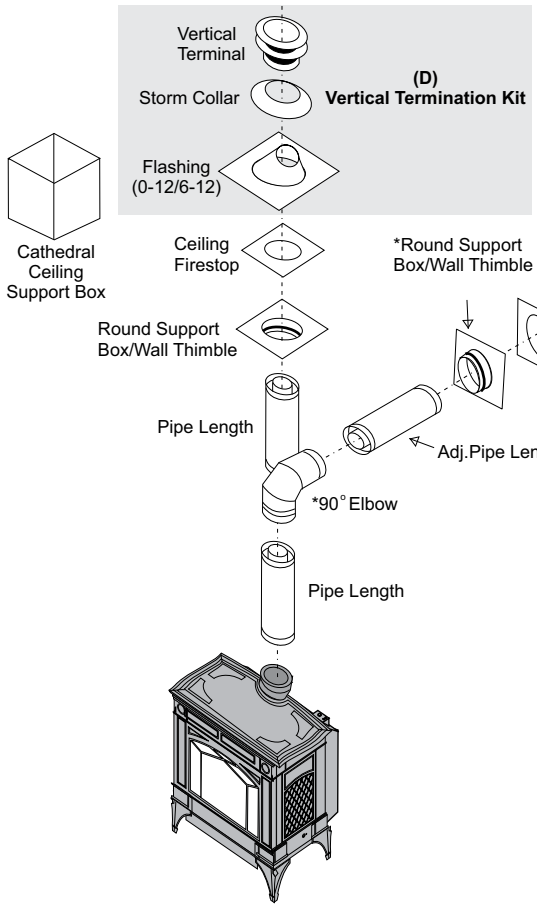

Dura-Vent Horizontal Termination Installation

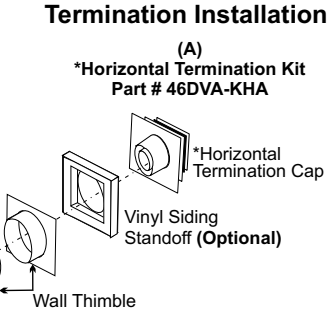

Basic Horizontal Kit

1 90° Elbow
1 Wall Thimble Cover
1 Horiz. Sq. Term. Cap

Alternate Horizontal Termination Caps

AstroCap
Part# 946-523/P

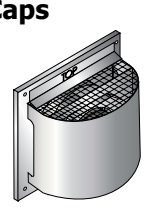

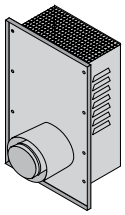

Alternate Horizontal Riser Vent Terminal Part# 640-530/P

The FPI AstroCap™ is certified for installations using FPI venting systems as well as Simpson Dura-Vent® and Direct Vent.

The FPI AstroCap™ is a proprietary trademark of FPI Fireplace Products International Ltd.

Dura-Vent® and Direct Vent are registered and/or proprietary trademarks of Simpson Dura-Vent Co. Inc.

You will require the following components with your new Direct Vent Freestanding Gas Stove. Please review your product to make sure you have everything you need. In the event that you are missing any part, contact your dealer.

Note: These are the minimum pieces required. Other parts may be required for your particular installation. See above for a list of vent parts.

If installing termination on a siding covered wall, a vinyl siding standoff or furring strips can be used in order to ensure that the termination is not recessed into siding.

The vinyl siding standoff is required for walls with vinyl siding.

Minimum components for a Dura-Vent Horizontal Installation:

A) Dura-Vent Horizontal Termination Kit
B) Wall Thimble (required for combustible walls)

Minimum components for a Dura-Vent Vertical Termination:

D) Dura-Vent Vertical Termination Kit. See above for pipe lengths.

HORIZONTAL TERMINATIONS

1) Set the unit in its desired location. Check to determine if wall studs are in the way when the venting system is attached. If this is the case, you may want to adjust the location of the unit.

2) Assemble the desired combination of pipe and elbow to the appliance adapter with pipe seams oriented down. Offset the pipe seams as double seams in one place will cause the outer pipe to take an oval shape. Kit comes complete with 18" of straight vent - 6-5/8" dia. black outer pipe and 4" dia. inner vent.

3) With the pipe attached to the stove, slide the stove into its correct location, and mark the wall for a 9-1/2" (inside dimensions) round hole. The center of the round hole should line up with the centerline of the horizontal pipe, as shown in diagram 1. Cut and frame the 9-1/2 round hole in the exterior wall where the vent will be terminated. If the wall being penetrated is constructed of non-combustible material, i.e. masonry block or concrete, a 7" diameter hole is acceptable.

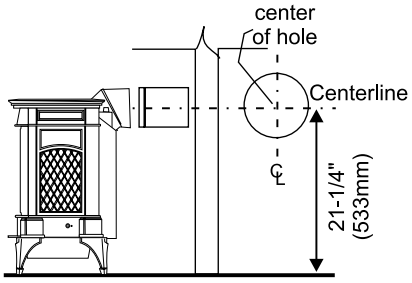

Diagram 1

a) The horizontal run of vent should have a 1/4 inch rise for every 1 foot of run towards the termination. Never allow the vent to run downward. This could cause high temperatures and may present the possibility of a fire.

b) The location of the horizontal vent termination on an exterior wall must meet all local and national building codes, and must not be blocked or obstructed. Refer to the "Exterior Vent Terminal Locations" section.

c) Snorkel Terminations:
For installations requiring a vertical rise on the exterior of the building, 14-inch and 36-inch tall snorkel terminations as shown in Diagram 2 are available, as well as the standard riser vent. Follow the same installation procedures as used for standard horizontal termination. NEVER install the snorkel upside down.

*Diagram 2a: As specified in CGA B149 Installation Code. Local codes or regulations may require different clearances.

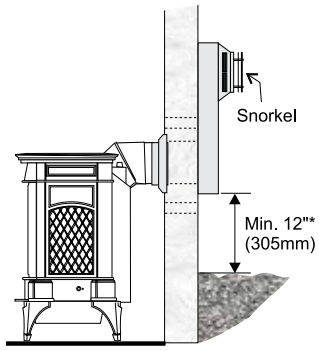

Diagram 2a

*As specified in CGA B149 Installation Code. Local codes or regulations may require different clearances.

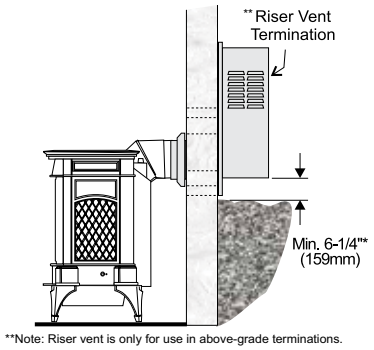

Diagram 2b

NOTE: For snorkel terminations in ABOVE grade installations, follow national or local code requirements.

Below Grade Snorkel Installation
If the snorkel termination must be installed below grade, i.e. basement application, proper drainage must be provided to prevent water from entering the snorkel termination. Do not attempt to enclose the snorkel within the wall or any other type of enclosure. See diagram 2c.

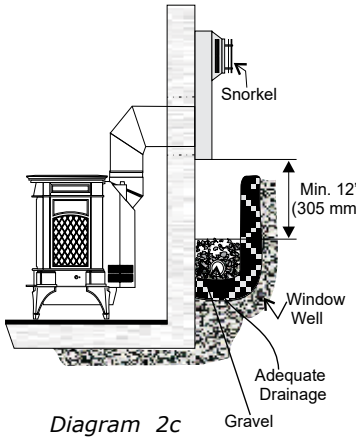

Diagram 2c

4) Install wall penetration heat shield in the center of the 9-1/2" round hole and attach with wood screws. The four wood screws provided should be replaced with appropriate fasteners for stucco, brick, concrete, or other types of sidings. See Diagram 3.

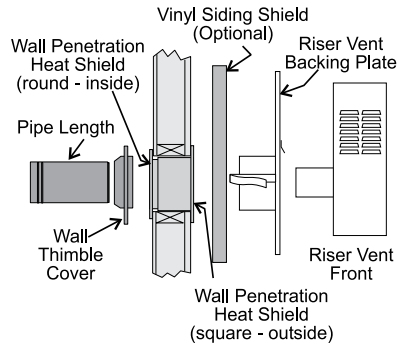

Diagram 3

5) If installing termination on a siding covered wall, a vinyl siding standoff or furring strips must be used to ensure that the termination is not recessed into the siding. See diagram 3. If installing the riser vent terminal follow the steps below:

1. Take the riser vent terminal and separate the backing plate from the riser vent front by removing 8 screws as shown in diagram 4.

2. Install the backing plate into the wall penetration heat shield and attach using 4 screws. Dia. 4.

3. Connect all pipe sections to unit and install into wall:

   a. Measure pipe length required and cut to length. Hint: use the cut end of the 6-5/8" dia. outer pipe at the vent terminal end.

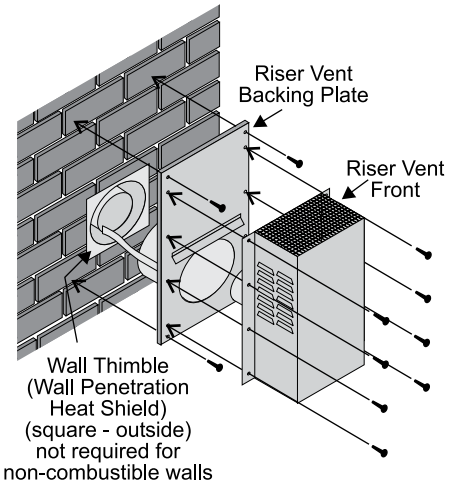

Diagram 4

b. Push the pipe sections completely together, the minimum pipe overlap is 1-1/4". Secure all outer pipe joints by using at least two screws. Locate the screws at the bottom of the pipe so that the screw heads are hidden on the final installation.

Note: For best results and optimum performance with each approved venting system, it is highly recommended to apply "Mill-Pac" sealant (supplied) to every inner pipe connection. Failure to do so may result in drafting or performance issues not covered under warranty.

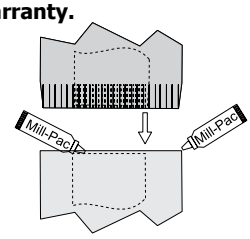

c. Before connecting the vent pipe to the vent termination, slide the black decorative wall thimble cover over the vent pipe, then slide the Wall Penetration Heat Shield over the vent pipe. Dia. 3.

d. Slide the appliance and vent assembly towards the wall carefully inserting the vent pipe into the riser vent terminal assembly. It is important that the vent pipe extends into the Riser Vent Backing Plate a sufficient distance so as to result in a minimum pipe overlap of 1-1/4 inches. Secure the connection between the vent pipe and the vent cap by attaching the two sheet metal strips extending from the Riser Vent Backing Plate into the outer wall of the vent pipe. Use two aluminium screws provided to connect the strips to the pipe section. Bend any remaining portion of the sheet metal strip back towards the vent cap and cut off any excess, it will be concealed by the decorative wall thimble cover. See diagram 5.

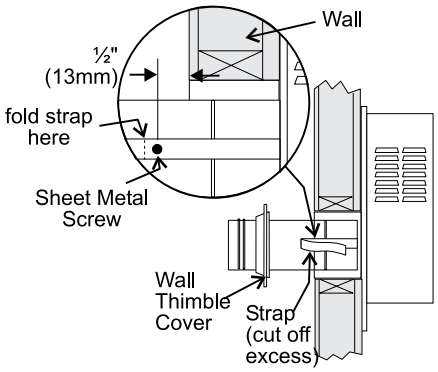

Diagram 5

9) Slide the decorative wall thimble up to the wall surface being careful not to scratch the paint. See diagram 5.

10) Back outside: Apply sealant to the 4" inner flue and slide the Riser Vent Front into the Backing Plate and fasten with 8 screws.

IMPORTANT:
When connecting the pipe to the Riser Vent, apply Mill-Pac to the inner pipe on the Riser Vent Terminal, around the bead. Ensure that the vent pipe is pushed past the bead for a secure fit.

11) Seal around the outer edge of the Riser Vent Backing Plate.

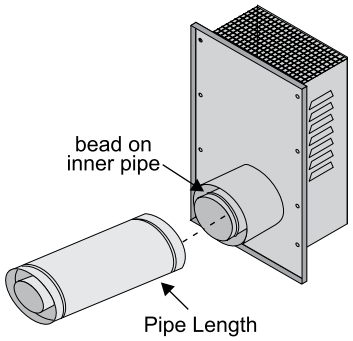

VERTICAL TERMINATIONS

1) Maintain the 1-1/4" clearances (air spaces) to combustibles when passing through ceilings, walls, roofs, enclosures, attic rafter, or other nearby combustible surfaces. Do not pack air spaces with insulation. Check the "Venting Arrangement" section for the maximum vertical rise of the venting system and the maximum horizontal offset limitations.

2) Set the gas appliance in its desired location. Drop a plumb bob down from the ceiling to the position of the appliance flue exit, and mark the location where the vent will penetrate the ceiling. Drill a small hole at his point. Next, drop a plumb bob from the roof to the hole previously drilled in the ceiling, and mark the spot where the vent will penetrate the roof. Determine if ceiling joists, roof rafters or other framing will obstruct the venting system. You may wish to relocate the appliance or to offset, as shown in diagram 8 to avoid cutting load bearing members.

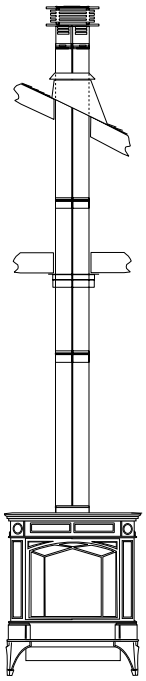

Diagram 7

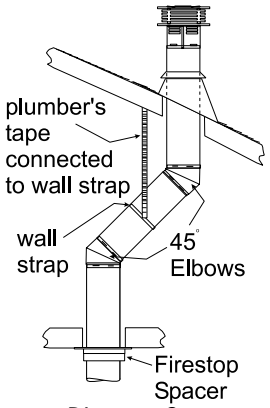

Diagram 8

3) To install the Round Support Box/Wall Thimble in a flat ceiling, cut a 10 inch square hole in the ceiling centred on the hole drilled in Step 2. Frame the hole as shown in diagram 9.

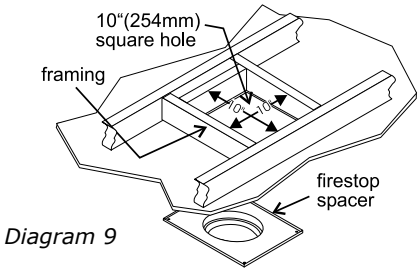

Diagram 9

4) Assemble the desired lengths of black pipe and elbows necessary to reach from the appliance adapter up though the Round Support Box. Insure that all pipes and elbow connections are in the fully twist-locked position and sealed.

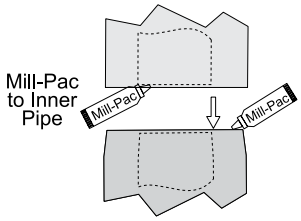

Note: For best results and optimum performance with each approved venting system, it is highly recommended to apply "Mill-Pac" sealant (supplied) to every inner pipe connection. Failure to do so may result in drafting or performance issues not covered under warranty.

5) Cut a hole in the roof centred on the small drilled hole placed in the roof in Step 2. The hole should be of sufficient size to meet the minimum requirements for clearance to combustibles of 1-1/4". Slip the flashing under the shingles (shingles should overlap half the flashing) as per diagram 10.

6) Continue to assemble pipe lengths.

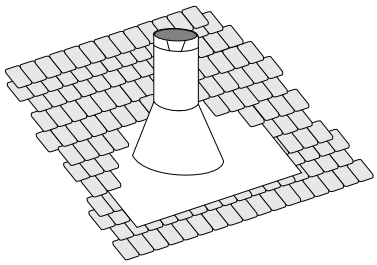

Diagram 10: The upper half of the flashing is installed under the roofing material and not nailed down until the chimney is installed. This allows for small adjustments.

Note: If an offset is necessary in the attic to avoid obstructions, it is important to support the vent pipe every 3 feet, to avoid excessive stress on the elbows, and possible separation. Wall straps are available for this purpose. See diagram 5.

Galvanized pipe and elbows may be utilized in the attic as well as above the roofline. The galvanized finish is desirable above the roofline due to its higher corrosion resistance.

Continue to add pipe sections through the flashing until the height of the vent cap meets the minimum height requirements specified in diagram 11 or local codes. Note that for steep roof pitches, the vertical height must be increased. A poor draft, or down drafting can result from high wind conditions near big trees or adjoining roof lines, in these cases, increasing the vent height may solve the problem.

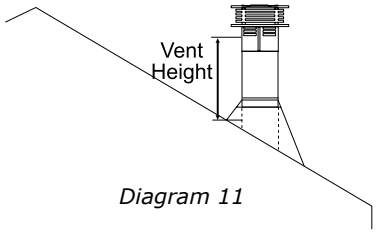

Diagram 11

Roof Pitch	Minimum Vent Height	
	Feet	Meters
flat to 7/12	2	0.61
over 7/12 to 8/12	2	0.61
over 8/12 to 9/12	2	0.61
over 9/12 to 10/12	2.5	0.76
over 10/12 to 11/12	3.25	0.99
over 11/12 to 12/12	4	1.22
over 12/12 to 14/12	5	1.52
over 14/12 to 16/12	6	1.83
over 16/12 to 18/12	7	2.13
over 18/12 to 20/12	7.5	2.29
over 20/12 to 21/12	8	2.44

7) Ensure vent is vertical and secure the base of the flashing to the roof with roofing rails, slide storm collar over the pipe section and seal with a mastic.

8) Install the vertical termination cap by twist locking it.

Notes:

a) For multistorey vertical installations, a Ceiling Fire stop is required at the second floor, and any subsequent floor. Diagram 12. The opening should be framed to 10 " x 10" inside dimensions, in the same manner as shown in diagram 9.

b) Any occupied areas above the first floor, including closets and storage spaces, through which the vertical vent passes, must be enclosed.

CATHEDRAL CEILINGS

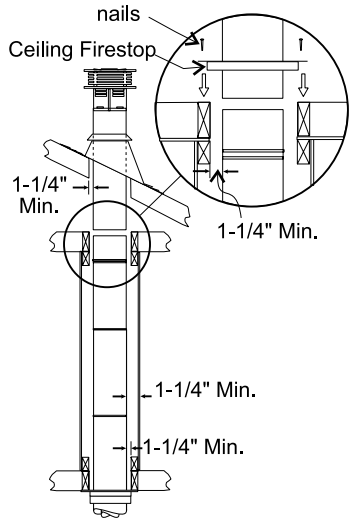

Diagram 12

Offset Chart

GS 6"(152mm) Nominal Diameter ID					
Offset		Pipe Length (L)		Height	
inches	mm	inches	mm	inches	mm
4 ¾	121	0	0	13 1/4	337
9	229	6	152	17 1/2	445
11 1/4	286	9	229	19 1/2	495
13 1/4	337	12	305	21 3/4	552
21 3/4	552	24	610	30 1/4	768
30 1/4	768	36	914	39	991
38	965	48	1219	47	1194

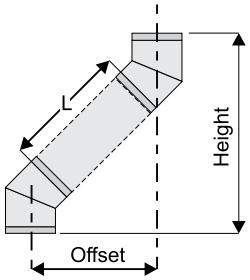

CONVERTING CLASS-A METAL CHIMNEY TO DIRECT VENT SYSTEM

Approved for US Installations Only. The use of an existing chimney as an air intake is not covered under the ANS Z21.88-2014/CSA 2.33-2014 test methods and the resulting ITS/WHI product certification. The code Authority Having Jurisdiction must be consulted prior to proceeding with this installation method.

Prior to installation and connection of the vent system to a Class A chimney, the chimney must be inspected and thoroughly cleaned by a qualified service person, such as a certified chimney sweep or home inspection service.

The direct vent system must not be connected to a damaged Class A chimney.

For Class A chimneys cleanout doors and caps or plugs for cleanout tee fittings and ash dumps shall be secured in place and sealed before installing a Direct Vent system within the chimney.

If the appliance shuts off during operation, contact a qualified service person to determine if a negative pressure and/or leaky chimney condition exists. Do not operate the appliance until the problem is corrected.

Important : If converting this appliance to a Class A Metal Chimney, the IPI/CPI switch on the hand held remote control/transmitter must be turned to CPI (Continuous Pilot Ignition) at all times. This will avoid nuisance pilot outages during operation of this appliance. See Remote manual for setup of this IPI/CPI switch.

1) Remove the existing chimney cap.

2) Measure the distance from the top end of the chimney to the bottom of the ceiling support box, add 3" (76mm) to this measurement, and cut a section of the 4" flex pipe to that length (the flex should already be extended to its nominal length).

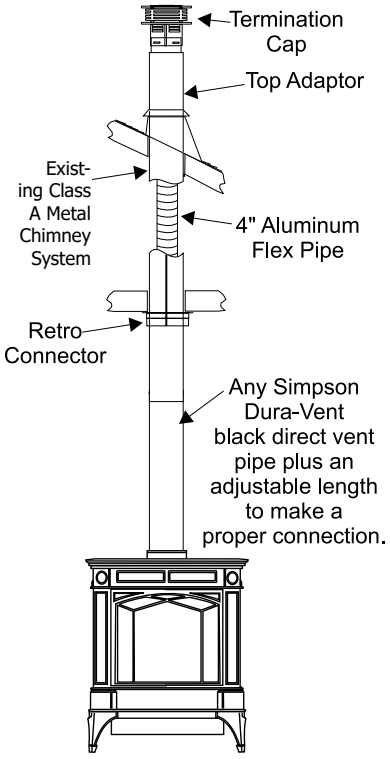

Diagram 1

3) Connect the end of the flex pipe section to the underside of the Top Adaptor using 3 sheet metal screws. Diagram 2.

4) Pass the flex pipe down through the center of the chimney system, and center the adaptor on the top of the chimney pipe. Drill four 1/8" diameter holes through the adaptor and into the chimney top. Insure that you are in fact, drilling into the metal on the chimney. Twist-lock the Termination Cap onto the Adaptor. (Diagrams 3 and 4).

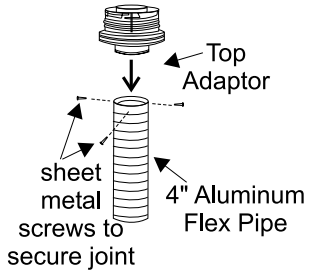

Diagram 2

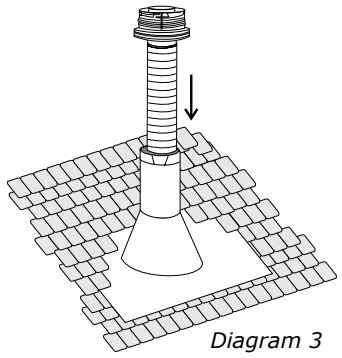

Diagram 3

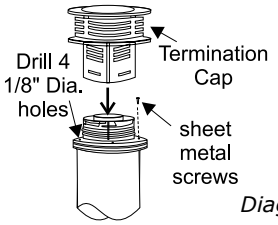

Diagram 4

5) Pull the flex pipe down through the ceiling support box, until it protrudes approximately 3" (76mm). Connect the flex pipe to the Retro Connector by slipping it into the 4-3/4" diameter sleeve on the top side of the Connector. Use 3 sheet metal screws to assemble these two parts.

6) Push the flex pipe back up into the ceiling support box, center the Retro Connector, and attach it to the support box, or decorative sleeve for double wall solid packed pipe, with the sheet metal screws (supplied). The holes in the Retro Connector are pre-punched. Diagram 5.

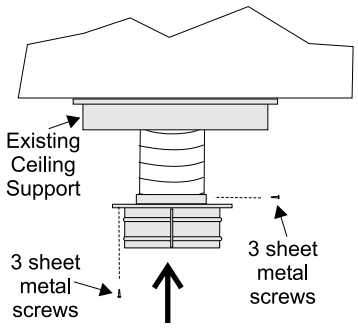

Diagram 5

7) The connection between the appliance and the Retro Connector may be completed with sections of black direct vent pipe, together with an adjustable length.

Round Support (RDS) & Square Support (SQS)

If your home has a cathedral ceiling (no attic space between the ceiling and the roof), install the chimney and support as follows.

1) Situate the chimney in a convenient location as near as possible to the appliance outlet. Cut and frame a hole in the roof for the support. The sides of this hole must be vertical with 1-1/4" clearance.

2) Place the support in the opening. Lower it to the correct height as determined by the table and diagram below.

Using a level, make sure the support is vertical. If the support extends above the roof, cut it flush with the top of the roof. Nail the support to the frame opening using (8) 3" spiral nails or #8 x 1-1/2" screws.

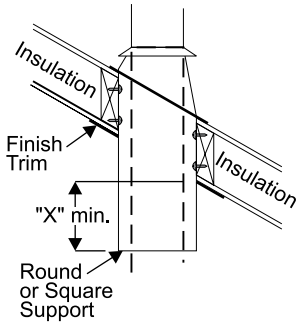

Slope	"X"
0/12 - 2/12	4"
2/12 - 7/12	5-1/2"
7/12 - 12/12	6-3/4"
12/12 - 24/12	7-1/2"
24/12+	12-1/2"

Note: If you are using a 6" square support you may find it difficult to screw it in place because it is fairly small inside.

Simpson Dura-Vent has provided angle brackets with this support which can be screwed to the outside of the support box and nailed to surrounding framing as required. Use a minimum of four #8 x 1/2" screws per bracket. In some cases these brackets may need to be trimmed (e.g.: to fit under a flashing). Place the Finish Collar around the support and fasten it to the ceiling using the screws provided.

3) Use appropriate roof flashing. Place the flashing under the upper shingles and on top of the lower shingles approximately half of the flashing should be under the shingles.

4) Assemble the desired lengths of Black Pipe and Elbows necessary to reach from the appliance adapter up through the support box and flashing to proper height as per Dia. 12, local codes. Ensure that all pipe and elbow connections are in their fully twist lock position.

5) Ensure vent is vertical and secure flashing to the roof with roofing nails. Slide the storm collar over the pipe section and seal with a mastic.

6) Twist lock the vent cap on to the last section.

Support Extensions - Round (RDSE) or Square (SQSE)

Steep pitched cathedral ceilings may require the use of a support extension. This piece fits down inside the support and can be adjusted to increase the support's length by up to 22". The extension is attached to the support using the eight metal screws provided. Be sure there is at least a 2 inch overlap where the extension joins the support.

HIGH ELEVATION

This unit is approved in Canada for altitude to 4500 ft. (CSA-2.17). For Natural Gas installations above 4500 ft. follow current CSA-B149.1.

GAS CONNECTION

The gas connection is a 3/8" NPT 90° elbow. The gas line can be rigid pipe or to make installation easier, use a listed flexible connector and/or copper tubing if allowed by local codes. Since some municipalities have additional local codes it is always best to consult with your local authorities and the CSA B149.1 installation codes.

For USA installations follow local codes and/or the current National Fuel Gas Code, ANSI Z223.1.

When using copper or flex connectors use only approved fittings. Always provide a union so that gas lines can be easily disconnected for burner and/or valve servicing. Flare nuts for copper lines and flex connectors are usually considered to meet this requirement.

IMPORTANT: ALWAYS CHECK FOR GAS LEAKS WITH A SOAP AND WATER SOLUTION OR GAS LEAK DETECTOR. DO NOT USE OPEN FLAME FOR LEAK TESTING.

Note: Prior to any pressure testing of the gas supply piping system that exceeds test pressures of 1/2 psig, this appliance must be disconnected from the piping system. If test pressures equal to or less than 1/2 psig are used then this appliance must be isolated from the piping system by closing its individual manual shut-off valve during the testing.

H15E-NG11 System Data	
For 0 to 4500 feet altitude **Burner Inlet Orifice Sizes:**	#47
Max. Input Rating **Min. Input Rating**	18,000 Btu/h 12,700 Btu/h
Supply Pressure	min.5.0" w.c.
Manifold Pressure (High)	3.5"w.c.

H15E-LP11 System Data	
Conversion Kit	
For 0 to 4500 feet altitude **Burner Inlet Orifice Sizes:** **Max. Input Rating** **Min. Input Rating**	#55 18,000 Btu/h 15,500 Btu/h
Supply Pressure	min.11.0" w.c.
Manifold Pressure (High)	10" w.c.

AERATION ADJUSTMENT

The air shutter can be adjusted by moving the adjusting wire up or down. The wire is accessed through the bottom. Open the air shutter for a blue flame or close for a yellower flame. The burner aeration is factory set but may need adjusting due to either the local gas supply or altitude.

Minimum Air Shutter Opening:
3/16" Natural Gas
1/4" Propane

CAUTION: *Carbon will be produced if air shutter is closed too much.*

Note: Any damage due to carboning resulting from improperly setting the aeration controls is NOT covered under warranty.

Note: Aeration Adjustment should only be performed by an authorized FPI Installer at the time of installation or service.

1. Remove one (1) screw on the right side of the unit to remove the access panel.

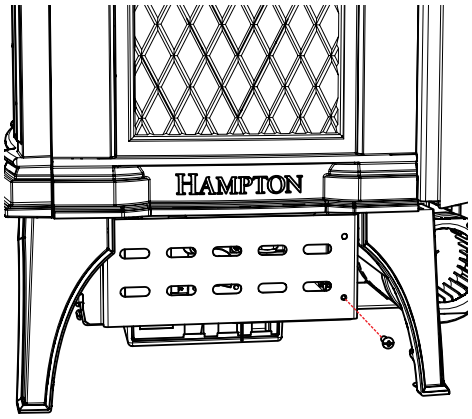



Pull adjustment wire up to close or down to open aeration

Closed - Tall yellow
Open - Short Blue

GAS PIPE PRESSURE TESTING

The appliance must be isolated from the gas supply piping system by closing its individual manual shut-off valve during any pressure testing of the gas supply piping system at test pressures equal to or less than 1/2 psig. (3.45 kPa). Disconnect piping from valve at pressures over 1/2 psig.

The manifold pressure is controlled by a regulator built into the gas control, and should be checked at the pressure test point.

Note: To properly check gas pressure, both inlet and manifold pressures should be checked using the valve pressure ports on the valve.

1) Make sure the unit is in the "OFF" position.

2) Loosen the "IN" and/or "OUT" pressure tap(s), turning counterclockwise with a 1/8" wide flat screwdriver.

3) Attach manometer to "IN" and/or "OUT" pressure tap(s) using a 5/16" ID hose.

4) Light the pilot and turn the valve to "ON" position. Read manometer.

5) The pressure check should be carried out with the unit burning and the setting should be within the limits specified on the safety label.

6) When finished reading manometer, turn off the gas valve, disconnect the hose and tighten the screw (clockwise) with a 1/8" flat screwdriver. **Note: Screw should be snug, but do not over tighten**

885 S.I.T. VALVE DESCRIPTION

1) 6 Stage flame adjustment
2) Pilot adjustment
3) Inlet Pressure Tap
4) Outlet Pressure Tap
5) Pilot Outlet
6) Main Gas Outlet
7) Main Gas Inlet

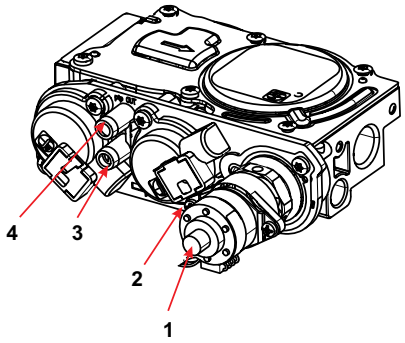

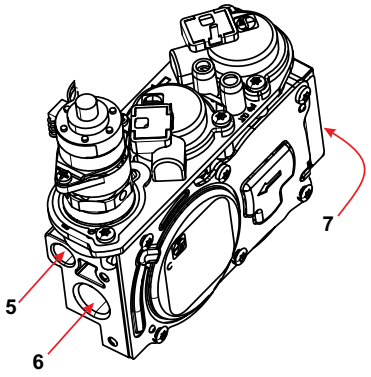

CONVERSION FROM NG TO LP

THIS CONVERSION MUST BE DONE BY A QUALIFIED GAS FITTER
IF IN DOUBT DO NOT DO THIS CONVERSION !!

Each Kit contains one LPG Conversion Kit (Part#382-977)

LP Conversion Kit Contains:

Qty.	Part #	Description
1	904-529	5/32" Allen Key
1		Burner Orifice #55
1	918-590	Label "Converted to LPG"
1	908-528	Red "LPG" label
1	910-037	LP Injector (Pilot Orifice)
1	911-011	Stepper Motor
1	920-031	Instruction Sheet

Installation of LP Conversion Kit:

1. **Shut off the gas and electrical supply.**
2. Lift off the Cast Top and remove the cast front and the glass door (see details in manual).
3. Remove the logs, embers (if installed).
4. Remove the 2 screws holding the Burner Assembly to the firebox base. Push the Burner Assembly to the left and lift out.

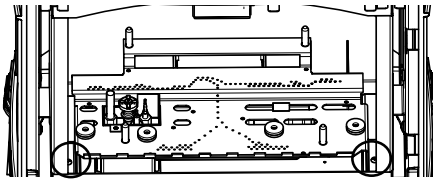

Remove the 2 screws, push Burner Assembly to the left and lift out.



5. Pull off the pilot cap to expose the pilot orifice.



6. Unscrew the pilot orifice with the allen key and replace with the LP pilot orifice in the kit and replace pilot cap.

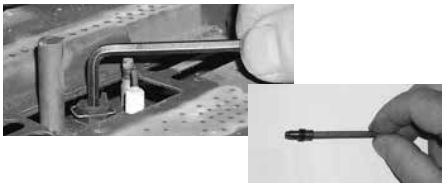

7. Remove burner orifice with a 1/2" wrench and discard. Use another wrench to hold on to the elbow behind the orifice.

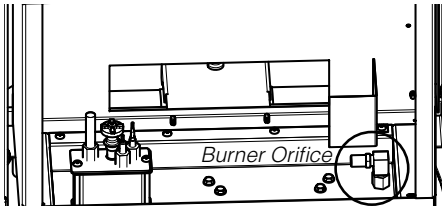

8. Reinstall new burner orifice LP stamped #55 and tighten.
9. Open the front panel and remove the cover plate by removing two screws.



10. Remove the right side access panel by removing 1 screw and disconnect the NG stepper motor wires from the IFC marked X6 in location shown below.



11. Remove NG stepper motor by removing 2 screws in locations shown below. Replace with LP stepper motor, secure in place with 2 screws.



12. Connect the LP stepper motor to the IFC (same port as NG stepper removed from in Step 10), reinstall access panel.
13. Attach the label "This unit has been converted to LPG" near or on top of the serial # decal.
14. Replace yellow "NG" label with red "LPG" label.
15. Reverse steps 4 through 1.
16. Check for gas leaks.
17. Check inlet and outlet pressures.
18. Check operation of flame control.

Installer Notice:
These instructions must remain with the appliance.

LOG SET INSTALLATION

Read the instructions below carefully and refer to the diagrams. If the logs are broken do not use the unit until they are replaced. Broken logs can interfere with the pilot operation.

The log kit contains the following:

a) Rear Log
b) Left Side Front Log
c) Right Side Front Log
d) Center Front Log
e) Embers
f) Platinum Embers 946-669 (supplied with packaged manual)

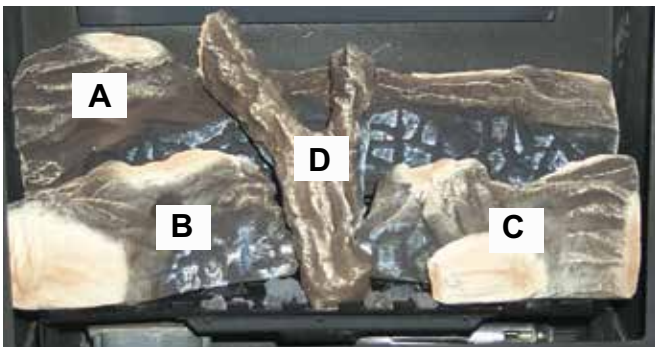

1) Shut off the gas supply.

2) Lift off Cast Top.

3) Remove Cast Front (and set the light assembly aside) by removing the 2 screws using a 7/16" wrench. Pull front out and then up as shown below.

Inside view





4) Remove Glass front - see instructions in manual.

5) Carefully remove the logs from the unit and unwrap them. The logs are fragile, handle with care - **do not force into position.**

6) Place the rear log on the 2 rear log locating pins on the rear of the burner with the flat side to the back.

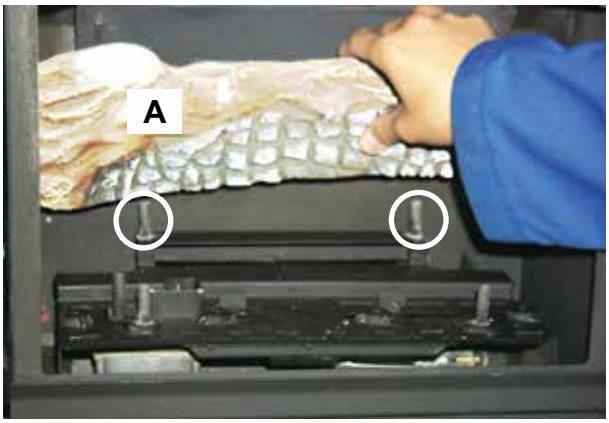

7) Place the 2 front logs on the front log locating pins. Ensure the back of both logs rest against the tabs.



Left Front Log



Right Front Log

8) Take the embers and place on the burner in the space between the 2 front logs, ensure not to cover any burner ports. Do not put embers on the burner in the area between the front logs and the rear log. See photo below.

Separate platinum embers and place at the front of the burner in and around where the embers are placed. Avoid stacking platinum embers.

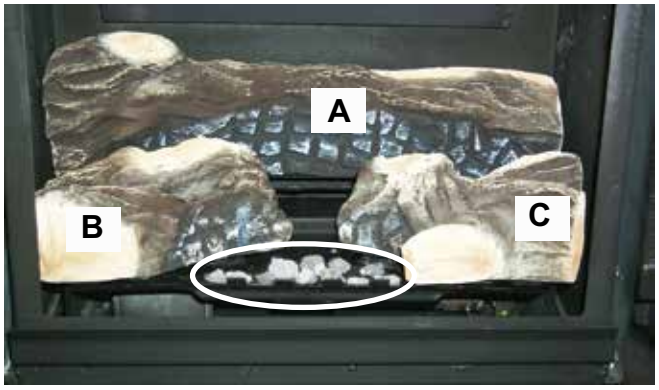

9) Place the center cross log on the top of the rear log and position as shown below.

Logs must be oriented as shown below.

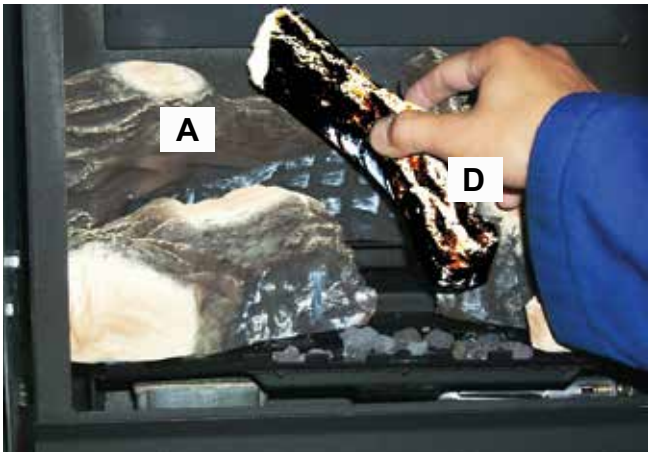

10) Test fire to ensure proper light off (make sure flame flows smoothly from one end of burner to the other). If there is any flame hesitation, check that area for any blockage of the burner ports.

11) Re-install the Glass Front, Cast Front and Top.

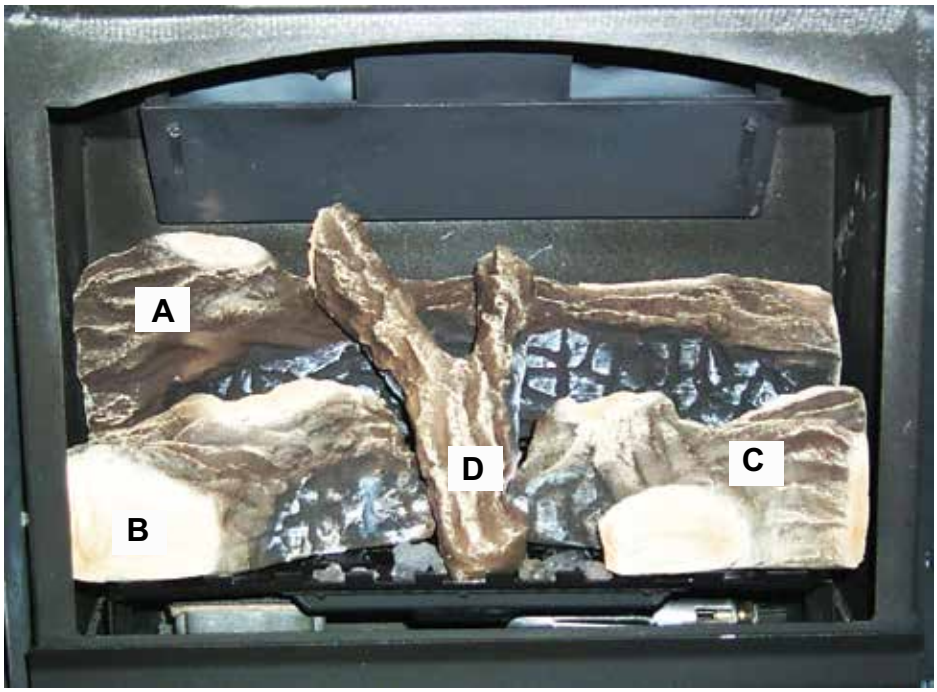

OPTIONAL WALL THERMOSTAT

A wall thermostat may be installed if desired. Connect the wires as per the wiring diagrams.

Note: Preferable if the thermostat is installed on an interior wall.

Hampton® offers an optional programmable thermostat but any 250-750 millivolt rated non-anticipator type thermostat that is CSA, ULC or UL approved may be used.

CAUTION
Do not wire millivolt wall thermostat wires to 120V wire.

BACK UP BATTERY

In the event of a power outage the unit may be operated by a back up battery system.

1. Open the right (when facing front of appliance) access panel by removing 1 screw.

2. Install 4 AA batteries into the battery holder.

Note: Remove the batteries when normal operation is resumed as the heat will drain the battery power rapidly.



REMOTE/IFC (INTEGRATED FIREPLACE CONTROL) CODING/ PAIRING

To code the IFC to the hand held remote, follow the procedure below.

1. Open the he bottom front access panel of the unit.

NOTE: Ensure that the main ON/OFF switch is in the ON position. (Unit will not function, unless it is in ON position)

2. Plug in 120 volt power cord into a grounded receptacle **or** install 4 AA batteries into battery pack and plug into battery terminals located near the gas valve. Do not use both. Only use the 4 AA batteries if 120 volt power is not available.
3. Press down the black button on the left side panel (when facing unit) until 3 beeps are heard.



Reset button

4. Install 3 AAA batteries into handheld remote.



5. Press the ON/OFF button on the hand held remote to code the remote to the IFC–after 4 beeps are heard–handheld is paired with IFC.

MANUAL OPERATION (NO REMOTE)

To divorce the remote transmitter, press the black button until it beeps 3 times, within 10 seconds press the black button again until a beep is heard. After divorcing the remote transmitter, the ON/OFF switch at the front of the unit will control the unit.

FINAL CHECK

Before leaving this unit with the customer, the installer must ensure that the appliance is firing correctly. This includes:

1) Clocking the appliance to ensure the correct firing rate (rate noted on label) at 15 minutes.

2) If required, adjusting the primary air to ensure that the flame does not carbon. First allow the unit to burn for 15min. to stabilize.

3) Check for proper draft.

CAUTION

Any alteration to the product that causes soo-ting or carboning that results in damage to the exterior facia is not the responsibility of the manufacturer.

WIRING DIAGRAM WITHOUT THERMOSTAT

WARNING:
Electrical Grounding Instructions
This appliance is equipped with a three pronged (grounding) plug for your protection against shock hazard and should be plugged directly into a properly grounded three-prong receptacle. Do not cut or remove the grounding prong from this plug.

This heater does not require a 120V A.C. supply for operation. In case of a power failure, the remote control/thermostat/ON/OFF switch will continue to operate.

Note: The optional fan and standard lights do require 120 volt power for it to operate.

CAUTION: Ensure that the wires do not touch a hot surface and are away from sharp edges.

Note:
4 AA Batteries must be installed into the back up battery compartment however for this unit to operate when power is lost. See battery back up instructions in this manual. The fan and or lights will not operate during a power outage.

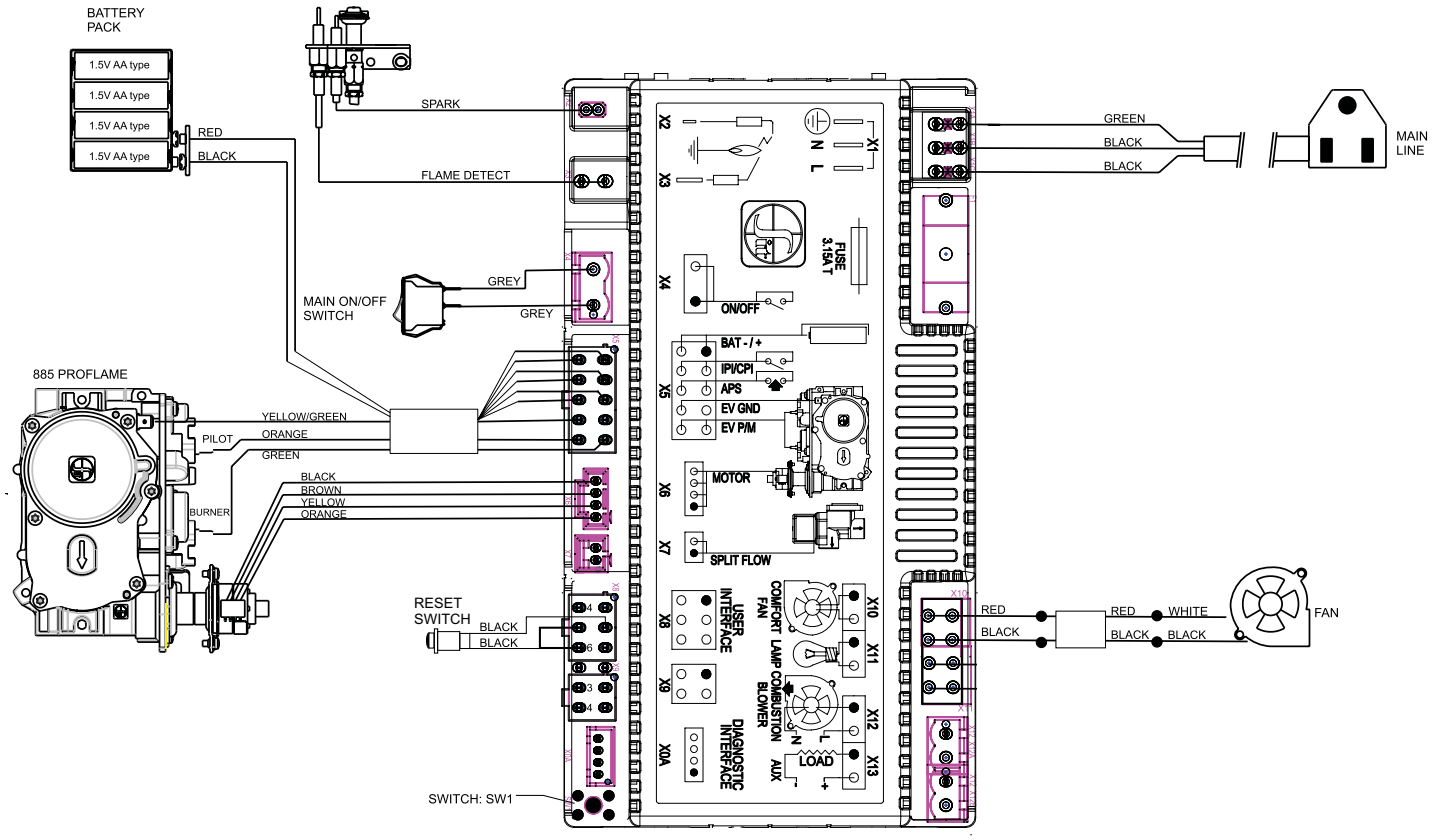

PROFLAME 2 IFC CONTROL BOARD

WIRING DIAGRAM WITH THERMOSTAT

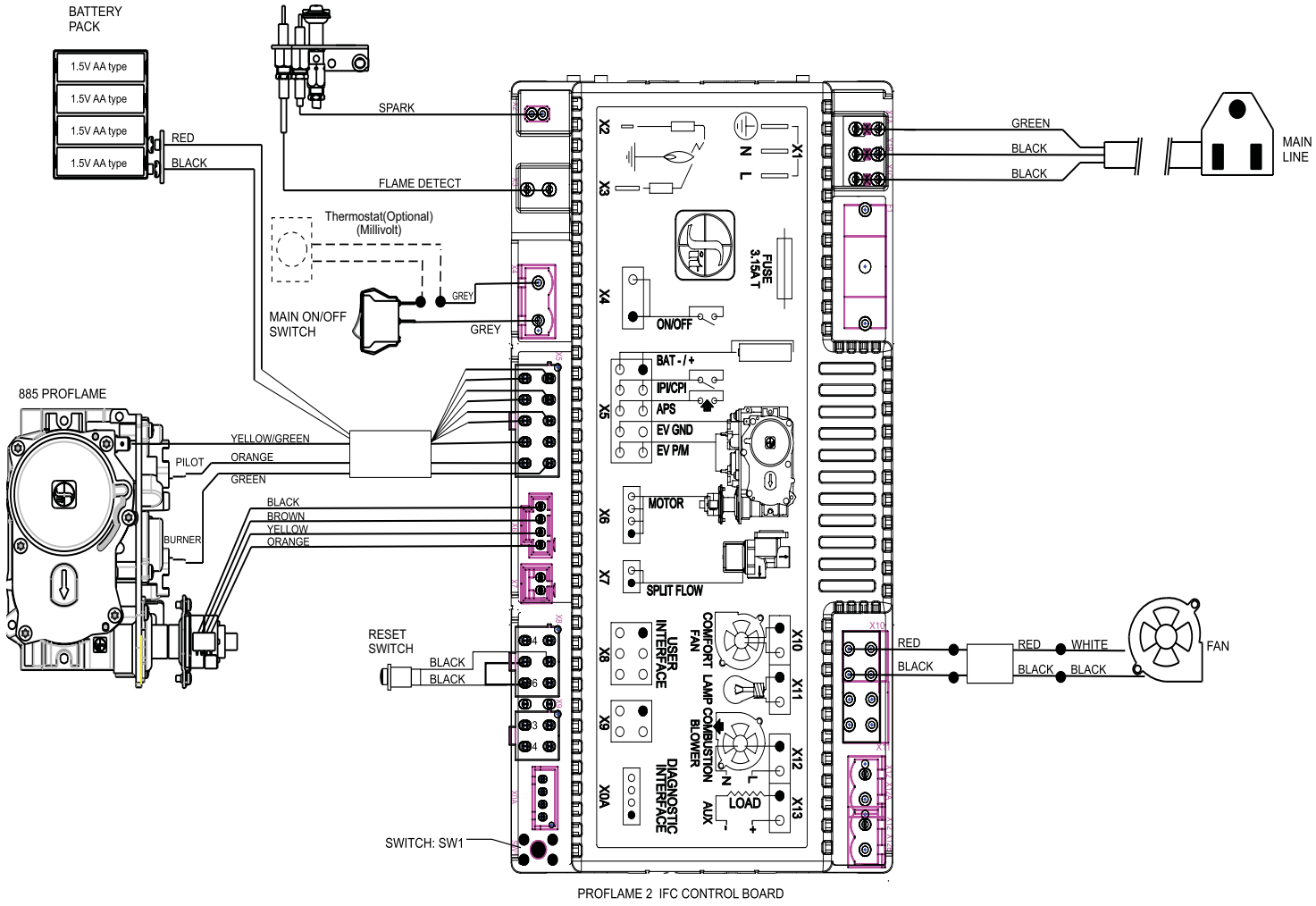

PROFLAME 2 IFC CONTROL BOARD

FIRST FIRE

The first fire in your stove is part of the paint curing process. To ensure that the paint is properly cured, it is recommended that you burn your fireplace for at least four (4. hours the first time you use it with the fan on. When first operated, the unit will release an odour caused by the curing of the paint, the burning off of any oils remaining from manufacturing. Smoke detectors in the house may go off at this time. Open a few windows to ventilate the room for a couple of hours.

The glass panel may require cleaning after the unit has cooled down.

DO NOT ATTEMPT TO CLEAN THE GLASS WHILE IT IS HOT.

Note: When the glass is cold and the appliance is lit, it may cause condensation and fog the glass. This condensation is normal and will disappear in a few minutes as the glass heats up.

During the first few fires, a white film may develop on the glass front as part of the curing process. The glass should be cleaned or the film will bake on and become very difficult to remove. Use a non-abrasive cleaner and NEVER clean the glass while it is hot.

DO NOT BURN THE APPLIANCE WITHOUT THE GLASS FRONT IN PLACE.

OPERATING INSTRUCTIONS

1. Read and understand these instructions before operating this appliance.
2. Check to see that all wiring is correct and enclosed to prevent possible shock.
3. Check to ensure there are no gas leaks.
4. Make sure the glass in the door frame is properly positioned. Never operate the appliance with the glass removed.
5. Verify that the venting and cap are unobstructed.
6. Verify log placement. If the pilot cannot be seen when lighting the unit, the logs have been incorrectly positioned.
7. The unit should never be turned off, and on again without a minimum of a 60 second wait.

This remote control requires coding. See remote coding instructions for details.

NOTE: This appliance will operate with 4 AA back-up batteries installed (see Back-up Battery section for details) during power outages. Only the optional fan and light will not operate until power is restored. If the remote is misplaced, the unit can be shut off by flipping the main **ON/OFF** switch, located behind the front cover plate, to the **OFF** position.

IMPORTANT: The remote control system supplied with this appliance has several options for starting/operating the appliance, please read the remote control operating instructions (packed with remote control) to understand how to operate this remote system.

OPERATION USING AN OPTIONAL WALL THERMOSTAT

All Hampton stoves ship with a full function remote control as standard equipment. This allows for basic on/off function as well as the ability to operate as a thermostat. With the addition of an optional wall cradle (820-477-AWT available from an authorized dealer) the remote can reside on a wall and carry out all the functions of a typical millivolt wall thermostat as well as being able to control the fan speed, accent light and the flame height. This is the recommended procedure for operating the unit with a thermostatic set point.
If a millivolt wall thermostat is required for bedroom installation or as preferred method of controlling the stove there are two options.

Option 1

1. Unscrew access door with 2x Philips head screws to gain access to IFC board.



Image 1

2. Turn fireplace ON using the remote control. Ensure thermostat function on top right hand corner is in OFF postion. See below. Preset your desired flame height/Fan speed (only If optional fan is installed).



Image 2

3. Connect thermostat to ON/OFF switch (Note: ON/OFF switch removed to show wiring).
4. Cut grey switch wire and strip grey switch wire as shown below (Image 3).



Image 3

5. Strip thermostat wires and connect thermostat wires to grey switch wires and Marrette wires as show below. (Image 4)



Image 4

6. Divorce the remote from the IFC by pressing the black reset Button located on the left side of the unit as shown below until an audible "beep" is heard. Repeat this step one more time, the remote will now be divorced.



***Note: The pilot flame will automatically be in CPI mode once the remote is divorced.**
***Note: if power is lost and there is no battery backup, this would have to be repeated as functionality is lost.**

7. With the thermostat connected and the Remote Divorced from the system, call for heat using the wall mounted thermostat. The unit will fire up with all preset functions set on the remote.

Optional 910-404/P wall thermostat shown.



Option 2
Wall thermostat only. Same as option 1 with step 2 bypassed.
** Please be aware that in this configuration the accent light, flame height adjustment and fan will not be available.

COPY OF THE LIGHTING PLATE INSTRUCTIONS

FOR YOUR SAFETY READ BEFORE LIGHTING
POUR VOTRE SÉCURITÉ – À LIRE AVANT LA MISE EN MARCHE

WARNING: If you do not follow these instructions exactly, a fire or explosion may result causing property damage, personal injury or loss of life. Improper installation, adjustment, alteration, service or maintenance can cause injury or property damage. Refer to the owner's information manual provided with this appliance. For assistance or additional information consult a qualified installer, service agency or gas supplier.

AVERTISSEMENT : Quiconque ne respecte pas scrupuleusement les instructions de la présente notice risque de déclencher un incendie ou une explosion pouvant entraîner des dégâts matériels ou des blessures pouvant être mortelles.
Tout défaut d'installation, de réglage, de modification, de service ou d'entretien peut entraîner des blessures ou des dommages matériels. Reportez-vous au manuel d'utilisation fourni avec cet équipement. Pour obtenir de l'aide ou des informations complémentaires, consulter un installateur ou un service d'entretien qualifié, ou le fournisseur de gaz.

A) This appliance is equipped with an ignition device which automatically lights the pilot.
Do not try to light the pilot by hand.
B) BEFORE OPERATING smell all around the appliance area for gas. Be sure to smell next to the floor because some gas is heavier than air and will settle on the floor.
WHAT TO DO IF YOU SMELL GAS
- Do not try to light any appliance.
- Do not touch any electric switch, do not use any phone in your building.
- Leave the building immediately.
- Immediately call your gas supplier from a neighbours phone. Follow the gas supplier's instructions.
- If you cannot reach your gas supplier, call the fire department.

C) Do not use this appliance if any part has been under water. Immediately call a qualified service technician to inspect the appliance and to replace any part of the control system and any gas control which has been underwater.

A) Cet appareil est muni d'un dispositif d'allumage qui allume automatiquement la veilleuse.
Ne tentez pas d'allumer la veilleuse manuellement.
B) AVANT LA MISE EN MARCHE, reniflez tout autour de l'appareil pour déceler une odeur de gaz. Reniflez au niveau du plancher, car certains gaz sont plus lourds que l'air et peuvent s'accumuler au niveau du sol.
QUE FAIRE SI VOUS SENTEZ UNE ODEUR DE GAZ :
- Ne tentez pas d'allumer l'appareil
- Ne touchez à aucun interrupteur; n'utilisez pas le téléphone se trouvant dans le bâtiment.
- Quittez immédiatement le bâtiment.
- Appelez immédiatement votre fournisseur de gaz depuis un téléphone extérieur. Suivez les instructions du fournisseur.
- Si vous ne pouvez pas rejoindre le fournisseur, appelez le service incendie.

C) N'utilisez pas cet appareil s'il a été plongé dans l'eau, même partiellement. Faites inspecter l'appareil par un technicien qualifié et remplacez tout élément du système de contrôle ou de commande qui a été plongé dans l'eau.

CAUTION: Hot while in operation. Do not touch. Severe burns may result. Due to high surface temperatures keep children, clothing and furniture, gasoline and other liquids having flammable vapors away. Keep burner and control compartment clean. See installation and operating instructions accompanying appliance.

ATTENTION : Surfaces chaudes lorsque l'appareil est en marche. Ne pas toucher. Risque de brûlures graves. En raison des températures élevées, les enfants, les vêtements et le mobilier, le carburant et tout autre liquide aux vapeurs inflammables doivent être tenus éloignés de l'appareil. Nettoyer régulièrement le brûleur et le compartiment des commandes. Voir les consignes d'installation et d'utilisation fournies avec l'appareil.

OPERATING INSTRUCTIONS / CONSIGNES DE FONCTIONNEMENT

1) STOP! Read the safety information above on this label.
2) Ensure the Main switch is in the ON position and/or the wall mounted battery holder (if equipped) is in the <REMOTE> position.
3) Press and release the ON/OFF button on the remote handheld transmitter. An audible beep should be heard from the receiver. If not using the remote, the unit can also be turned on by sliding the battery holder switch to the <ON> position (if equipped).
4) After approximately 4 seconds the spark ignition system will spark for 60 seconds to light the main burner.
5) The unit will turn on.
Note: The first attempt to ignition will last approximately 60 seconds. If there is no flame ignition (rectification) the board will stop sparking for approximately 35 seconds. After this wait time, the board will start a second try for ignition by sparking for approximately 60 seconds. If there is still no positive ignition after the second attempt the board will go into lock out.
The system will need to be reset as follows (after going into lock out mode):
a) Wait 5 minutes - turn the system off by pressing the ON/OFF button on the remote.
b) After approximately 2 seconds press the ON/OFF button again.
c) Unit will repeat step 2.
6) If the appliance will not operate, follow the instructions, "To Turn Off Gas to Appliance" and call your service technician or gas supplier.
This appliance is equipped with an on-demand pilot that shuts off after seven days.

1) STOP! Lisez les instructions de sécurité sur la portion supérieure de cette étiquette.
2) S'assurer que le commutateur principal est en position ON et/ou que le bloc-piles mural (le cas échéant) est en position <REMOTE>.
3) Appuyer sur la touche ON/OFF de la télécommande puis relâcher. Un bip sonore retentira depuis le récepteur. Si vous n'utilisez pas la télécommande, l'appareil peut également être allumé en faisant glisser le commutateur du bloc-piles sur la position <ON> (le cas échéant).
4) Après environ 4 secondes, le système d'allumage produira une étincelle pendant 60 secondes pour allumer le brûleur principal.
5) L'appareil s'allumera.
Remarque : Au premier allumage, le système tente d'allumer les flammes pendant 60 secondes. Si l'essai est infructueux, le système fera une pause de 35 secondes. C'est ce qu'on appelle l'étape de rectification. Ce délai écoulé, le système tente à nouveau d'allumer les flammes en produisant des étincelles pendant 60 secondes. Si les flammes ne s'allument toujours pas, le système se met en mode verrouillage.
Il faut alors le réinitialiser en suivant les étapes ci-dessous (pour le déverrouiller) :
a) Attendre 5 minutes et éteindre l'appareil en appuyant sur la touche ON/OFF de la télécommande.
b) Attendre 2 secondes et appuyer encore une fois sur la touche ON/OFF.
c) L'appareil répètera l'étape 2.
6) Si l'appareil ne fonctionne pas, suivez les instructions "Pour couper le gaz au niveau de l'appareil" et appelez un technicien qualifié ou votre fournisseur de gaz.
Cet appareil est équipé d'une veilleuse sur demande qui s'éteint après sept jours.

TO TURN OFF GAS TO APPLIANCE / POUR COUPER LE GAZ AU NIVEAU DE L'APPAREIL

1) Press the ON/OFF button on the remote or slide the wall mount switch to the "OFF" position.
2) If service is to be performed–you must disconnect power and shut off gas to the unit.
1) Appuyer sur la touche ON/OFF de la télécommande ou faites glisser l'interrupteur mural sur la position "OFF".
2) Lors de l'entretien de l'appareil, vous devez débrancher l'alimentation électrique et couper le gaz alimentant l'appareil.

DO NOT REMOVE THIS INSTRUCTION PLATE
NE PAS ENLEVER CETTE ÉTIQUETTE D'INSTRUCTIONS

919-649b

NORMAL OPERATING SOUNDS OF GAS APPLIANCES

It is possible that you will hear some sounds from your gas appliance. This is perfectly normal due to the fact that there are various gauges and types of steel used within your appliance. Listed below are some examples. All are **normal operating sounds** and should not be considered as defects in your appliance.

Blower:
Hampton® gas appliances use high tech blowers to push heated air farther into the room. It is not unusual for the fan to make a "whirring" sound when ON. This sound will increase or decrease in volume depending on the speed setting of your fan speed control.

Burner Tray:
The burner tray is positioned directly under the burner tube(s) and logs and is made of a different gauge material from the rest of the firebox and body. Therefore, the varying thicknesses of steel will expand and contract at slightly different rates which can cause "ticking" and "cracking" sounds. You should also be aware that as there are temperature changes within the unit these sounds will likely re-occur. Again, this is normal for steel fireboxes.

Pilot Flame:
While the pilot flame is on it can make a very slight "whisper" sound.

Gas Control Valve:
As the gas control valve turns ON and OFF, a dull clicking sound may be audible, this is normal operation of a gas regulator or valve.

Unit Body/Firebox:
Different types and thicknesses of steel will expand and contract at different rates resulting in some "cracking" and "ticking" sounds will be heard throughout the cycling process.

MAINTENANCE INSTRUCTIONS

1) Always turn off the valve before cleaning. For relighting, refer to lighting instructions. Keep the burner and control compartment clean by brushing and vacuuming at least once a year. When cleaning the logs, use a soft clean paint brush as the logs are fragile and easily damaged.

2) Clean glass (never when unit is hot), appliance, and door with a damp cloth. Never use an abrasive cleaner.

3) The heater is finished in a porcelain finish or with a heat resistant paint and should only be refinished with heat resistant paint (not with wall paint).

Never use an abrasive cleaner on the porcelain finish as it may scratch the surface.

4) Make a periodic check of burner for proper position and condition. Visually check the flame of the burner periodically, making sure the flames are steady; not lifting or floating. If there is a problem, call a qualified service person.

5) Caution: Label all wires prior to disconnection when servicing controls. Wiring errors can cause improper and dangerous operation.

6) The appliance and venting system must be inspected before use, and at least annually, by a qualified field service person, to ensure that the flow of combustion and ventilation air is not obstructed.

During the annual service call, the burner should be removed from the burner tray and cleaned. Replace the embers but do not block the pilot.

7) Keep the area near the appliance clear and free from combustible materials, gasoline, and other flammable vapours and liquids.

8) Each time the appliance is lit, it may cause condensation and fog the glass. This condensation and fog is normal and will disappear in a few minutes as the glass heats up.

Never operate the appliance without the glass properly secured in place.

WARNING: CHILDREN AND ADULTS SHOULD BE ALERTED TO THE HAZARDS OF HIGH SURFACE TEMPERATURE AND SHOULD STAY AWAY TO AVOID BURNS OR CLOTHING IGNITION. YOUNG CHILDREN SHOULD BE CAREFULLY SUPERVISED WHEN THEY ARE IN THE SAME ROOM AS THE APPLIANCE.

DO NOT USE THIS APPLIANCE IF ANY PART HAS BEEN UNDER WATER. IMMEDIATELY CALL A QUALIFIED SERVICE TECHNICIAN TO INSPECT THE APPLIANCE AND TO REPLACE ANY PART OF CONTROL SYSTEM AND ANY GAS CONTROL WHICH HAS BEEN UNDER WATER

CAUTION: ANY SAFETY SCREEN OR GUARD REMOVED FOR SERVICING AN APPLIANCE MUST BE REPLACED PRIOR TO OPERATING THE APPLIANCE.

CLOTHING OR OTHER FLAMMABLE MATERIAL SHOULD NOT BE PLACED ON OR NEAR THE APPLIANCE.

9) Periodically check the pilot flames. Correct flame pattern has two strong blue flames: 1 flowing around the flame sense, and 1 flowing across the rear of the burner (it does not have to be touching the burner).

Note: If you have an incorrect flame pattern, contact your Hampton® dealer for further instructions.

PILOT ADJUSTMENT

Periodically check the pilot flames. Correct flame pattern has two strong blue flames: 1 flowing around the flame sensor and 1 flowing across the burner (it does not have to be touching the burner).

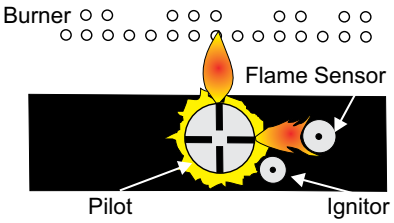

Note: If you have an incorrect flame pattern, contact your Regency® dealer for further instructions.

Incorrect flame pattern will have small, probably yellow flames, not coming into proper contact with the rear burner or flame sensor.

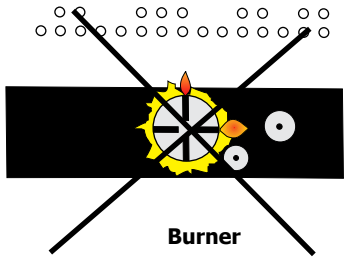

Top View of Pilot Flame

GENERAL VENT MAINTENANCE

Conduct an inspection of the venting system semi-annually. Recommended areas to inspect as follows:

1) Check the Venting System for corrosion in areas that are exposed to the elements. These will appear as rust spots or streaks, and in extreme cases, holes. These components should be replaced immediately.

2) Remove the Cap, and shine a flashlight down the Vent. Remove any bird nests, or other foreign material.

3) Check for evidences of excessive condensation, such as water droplets forming in the inner liner, and subsequently dripping out the joints, Continuous condensation can cause corrosion of caps, pipe, and fittings. It may be caused by having excessive lateral runs, too many elbows, and exterior portions of the system being exposed to cold weather.

4) Inspect joints, to verify that no pipe sections or fittings have been disturbed, and consequently loosened. Also check mechanical supports such as Wall Straps, or plumbers' tape for rigidity.

LOG REPLACEMENT

The unit should never be used with broken logs. Turn off the gas valve and allow the unit to cool before opening door to carefully remove the logs. The pilot light generates enough heat to burn someone. If for any reason a log should need replacement, you must use the proper replacement log. The position of these logs must be as shown in the diagram under Log Installation.

Note: Improper positioning of logs may create carbon build-up and will alter the unit's performance which is not covered under warranty.

GLASS GASKET

If the glass gasket requires replacement, use Part # 846-687.

GLASS REPLACEMENT

1. Turn off stove and allow to return to room temperature.

2. Lift off cast top and place on a soft surface.

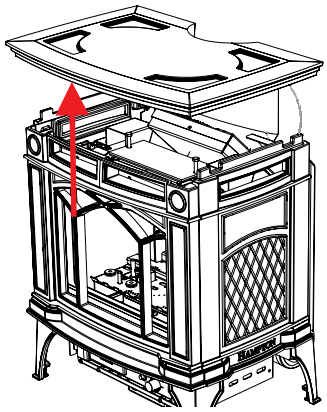

3. Remove 2 bolts and lift off cast front - place front carefully on a soft surface.

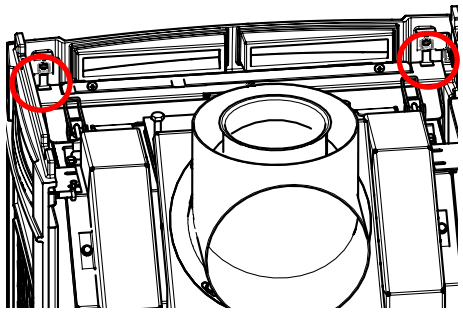

4. Slide the light assembly bracket out of the way.

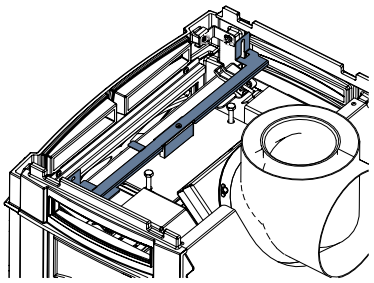

5. Lift both latches securing glass door and remove door.

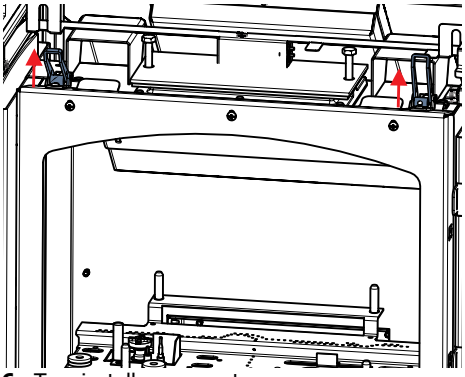

6. To reinstall–reverse steps.

FAN MAINTENANCE

If your fan requires maintenance or replacement, access to the fan is through the rear access panel on the back of the unit.

IMPORTANT: These fans collect a lot of dust from within your home. Ensure you maintain these fan motors on a regular basis by vacuuming out the fan squirrel cages, around the motor, and around the grills on the back of the stove.

WARNING:
Electrical Grounding Instructions
This appliance is equipped with a three pronged (grounding) plug for your protection against shock hazard and should be plugged directly into a properly grounded three-prong receptacle. Do not cut or remove the grounding prong from this plug.

IMPORTANT
Disconnect power supply before servicing

SAFETY SCREEN REPLACEMENT

1. Turn off stove and allow to return to room temperature.

2. Lift off cast top and place on a soft surface.

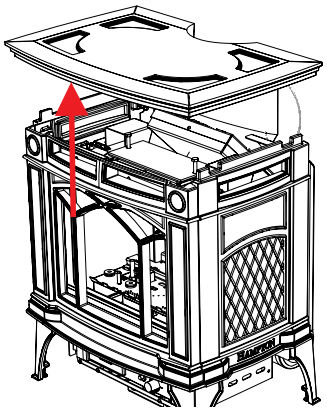

3. Remove 2 bolts and lift off cast front - place front carefully on a soft surface.

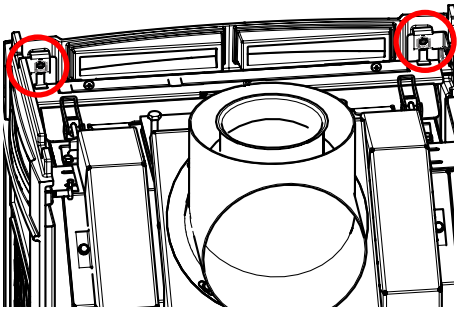

4. Slide the light assembly bracket out of the way.

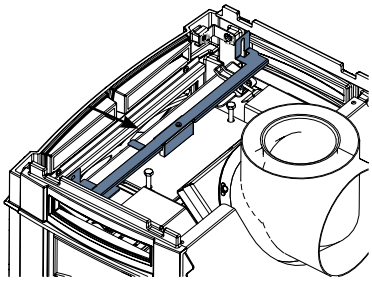

5. Loosen 4 screws in locations shown below to release safety screen frame.

6. Slide safety screen to one side to remove.

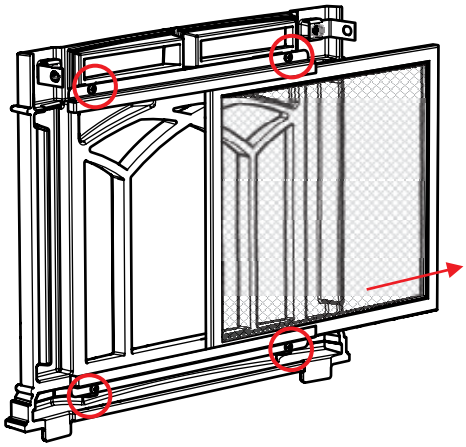

7. Replace screen and reverse steps to reinstall.

ACCENT LIGHT BULB REPLACEMENT

1. Turn off stove and allow to return to room temperature.

2. Shut off electrical supply

3. Lift off cast top and place on a soft surface.

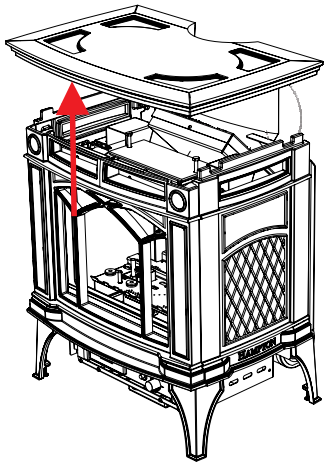

4. Loosen bolts securing cast front–slide light assembly bracket upward to release.

5. Remove one (1) screw to remove bulb housing.

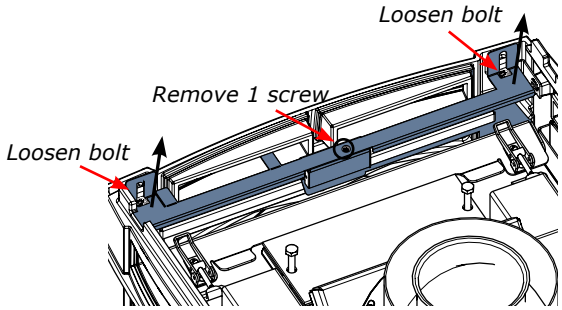

Lift light assy bracket off bolts to replace bulb
Remove one screw in location shown

6. Replace bulb.

Note: Oils from hands will shorten the life of the bulbs, do not handle bulbs with bare hands.

7. Reverse steps to reinstall.

VALVE ASSEMBLY REPLACEMENT

If your valve requires maintenance or replacement, use the following instructions:

Note: Always shut off gas and disconnect electrical supply before removing the valve.

1. Open the front panel and remove the cover plate by removing two screws.



2. Disconnect gas line to stove.

3. Disconnect 3/8" NPT pipe from 90° elbow on valve or flex connector.

4. Disconnect the two (2) switch wires from valve.

5. Lift off the Cast Top and remove the Cast Front and glass door (see detailed instruction in this manual).

6. Carefully move light bracket out of the way.



7. Carefully remove the logs and embers.

8. Remove burner by removing the 2 screws on each side and then lifting the burner tray out.

Note: Use a magnetic type screwdriver if possible.

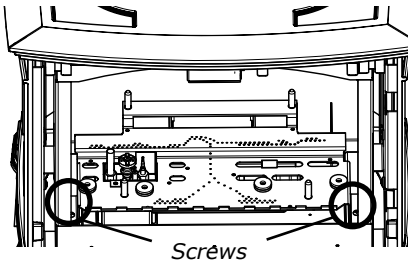

9. Remove back bracket by removing 1 screw.



10. Remove front bracket by removing 2 screws in locations shown below.



11. Remove 10 screws to remove valve tray.

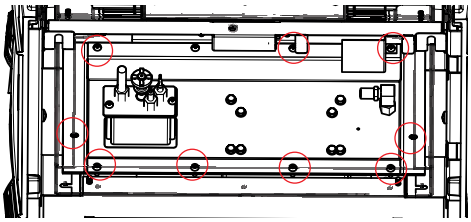

12. Disconnect the following wires prior to removing valve assembly:

a) Spark wire from IFC board (X2)
b) Flame detect wire from IFC board (X3)
c) Stepper motor wire harness from IFC board (X6)
d) Orange wire from gas valve (EV1)
e) Green wire from gas valve (EV2)
f) Yellow ground wire located under where orange wire was disconnected on gas valve.

13. Lift valve tray assembly up and out of unit to remove.

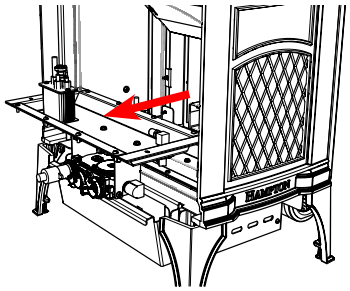

14. Replace with new valve assembly and reverse steps to reinstall.

GAS MAINTENANCE - RECOMMENDED ANNUAL ROUTINE

In order for your Regency appliance to continue to provide comfort to your home periodic maintenance must be performed to ensure it is operating at peak efficiency. The items in the list should be checked by a licensed gas service technician during the annual service check. Your unit may require more frequent maintenance checks if you notice any changes in how it operates. Operational changes to look for can include, but are not limited to, extended start up time, increased fan noise, residue/carbon build up, white build up on the glass/firebox, increased operating noise etc. Should any of these or other conditions arise, discontinue use and schedule a service check with your local licensed gas technician. The list below shows items your licensed service technician will need to check and service at least annually.

Clean

- Glass
- Interior bricks / panels
- Burner ports & burner air shutter
- Fan blades
- Log set
- Pilot orifices
- Pilot hood (change as needed)
- Flame sensor (electronic ignition models)
- Flame electrode
- Burner orifice
- Thermocouple (millivolt models)
- Thermopile (millivolt models)

Inspect

- Pilot assembly
- Burner
- Pressure relief gaskets/doors
- Flue connector gasket if present
- Door seal
- Firebox
- Venting
- Batteries (remote handheld, remote receiver, DC sparker, change as needed)
- Burner media (change as needed)
- Air shutter setting
- Wiring

Check

- Voltage on thermocouple/thermopile (millivolt models)
- Ohms reading on flame sense (electronic ignition models)
- Inlet/outlet fuel pressures as per rating plate
- Voltage/ohms readings on gas valve
- Ohms reading to on/off switch circuit (Milivolt models)

Gas Leak Tests

- Check main gas line connection to valve
- Check shut off valve connections
- Check connection at gas valve outlet
- Check connection at main burner orifice
- Check pilot fuel line at valve and at pilot assembly

MAIN ASSEMBLY

	Part #	Description
1.	945F	Flue Collar/Starter Collar
2.	380-007	Door frame
4.	382-917	Fan Assembly (Optional)
5.	383-201	Cast Front - Gray
	383-205	Cast Front - Timberline Brown
	383-207	Cast Front - Cream
5a.	383-231	Cast Top Grill - Gray
	383-235	Cast Top Grill - Timberline Brown
	383-237	Cast Top Grill - Cream
6.	383-211	Cast Top - Gray
	383-215	Cast Top - Timberline Brown
	383-217	Cast Top - Cream
7/8.	383-221	Cast Left/Right Side Comes With Legs (2 Per Side) - Gray
	383-225	Cast Left/Right Side Comes With Legs (2 Per Side) - Brown
	383-227	Cast Left/Right Side Comes With Legs (2 Per Side) - Cream

	Part #	Description
W801015 Touch Up Paint - Brown		
	938-337	Touch Up Paint - Cream
9.	382-515	Rear Panel Assembly
11.	382-516	Valve Cover Assembly
12.	382-005	Safety Screen Assy
13	770-066F	Top Relief Plate
14	W260280	Top Relief Plate Gasket
	770-067F	Plate Insulation Holder
	942-117	Top Relief Frame
	W260260	Top Relief Frame Gasket
	W842051	Gasket for Flue Adaptor
	W260108	Gasket for Inner Flue
	350-022	Cast Mount Bracket (Each)
	382-001	Firebox Bracket Left
	382-002	Firebox Bracket Right
15	382-105	Safety Screen Mounting Bracket (Each) *
	380-024	Fan Deflector - Right
	380-023	Fan Deflector - Left
	380-001	Door Support
	380-010	Baffle Plate
	380-011	Restrictor
20	948-255	Latch Ojop W/J-Hook
21	940-338/P	Replacement Glass
	846-687	1/4" x 5/16" Tadpole w/ Adhesive Glass Gasket (6') (41225)
	919-880	Manual

* Not available as a replacement part.

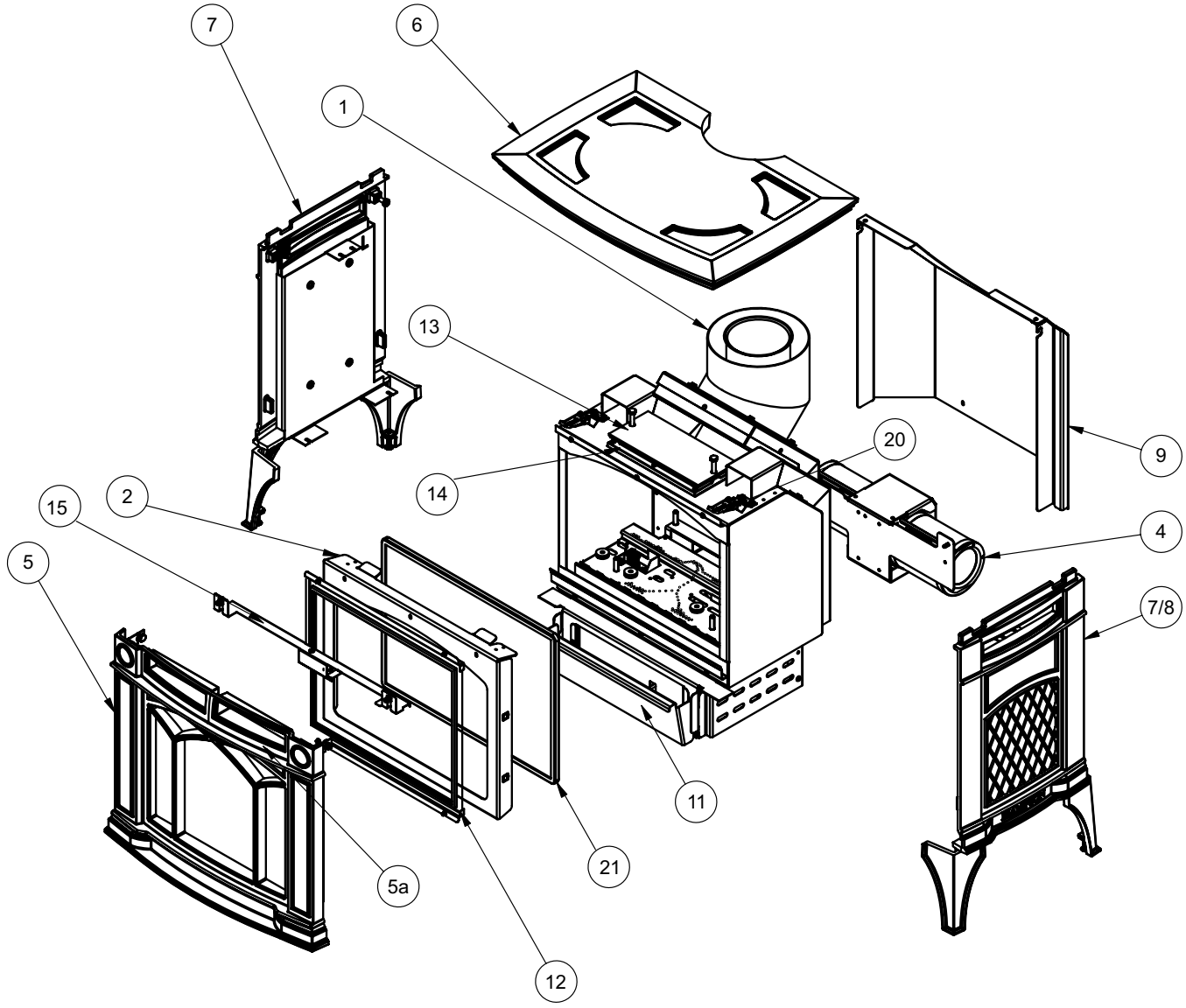

BURNER & LOG ASSEMBLY

	Part #	Description
16.	911-084	Valve - NG 885 SIT IPI
16.	911-085	Valve - LP 885 SIT IPI
17.	911-010	Stepper Motor - NG
17.	911-011	Stepper Motor - LP
18.	911-276	Pilot assembly IPI NG 2 Flame
	911-277	Pilot assembly IPI LP 2 flame
	910-036	Novasit Pilot Orifice - NG
	910-037	Novasit Pilot Orifice - LP
18a.	911-039	Novasit Pilot Hood 2 Way
	911-137	Pilot Hood Clip
18b.	911-037	Flame Sensor
18c.	911-038	Flame Electrode
19.	904-434	Burner Orifice #47 - NG
19.	904-575	Burner Orifice #55 - LP
	904-529	5/32" Allen Key - Pilot Orifice
	936-170	Burner Orifice Gasket
	W840470	Pilot Assembly Gasket (Each)
20.	382-574/P	Valve Assembly - NG
	382-776/P	Valve Assembly - LP
21.	380-015	Valve Assembly Gasket
	904-658	1/2" X 18" Flex Line - Gas Inlet
22.	911-266/P	IFC Board SIT Proflm II 7day PV+5 Sec.FFRT 0.584.625
	911-175	Hand Held Remote Control GTMFL 0.584.042
	911-179	ASM 120 Volt Power Cord Assembly
	911-173	Valve/Remote Wiring Harness 584.924
	911-177	4 Position Wire Harness Fan & Light Proflame 11
	911-178	2 Position Wire Harness On/Off Switch
	910-998	Halogen Light Socket Assembly
	910-997	Halogen Light Bulb 120 Volt/20 Watt/JCD Bi-Pin/ GY6.35
	910-157/P	Replacement Blower Motor Only With Squirrel Cage
	948-131	Blower Screens (Each)
	911-093	10 Foot Extension Cord
	911-027	Battery Holder W/9V Snap in 4-AA Batteries
	W842051	Starter Collar Gasket - Outer
	W260108	Starter Collar Gasket - Inner
23.	380-930	Log Set
39.	382-016	Valve Cover Plate Left
42.	382-012	Valve Cover Plate Right
41.	382-015	Valve Access Door
40.	382-018	Valve Cover Plate Front
43	910-246	On/Off Switch
44.	382-017	Valve Cover
45.	911-242	Reset Switch
46.	910-432	Pilot Tubing with Nuts
	350-530	Burner Assembly - Natural Gas/Propane

*Note: Not available as a replacement part.

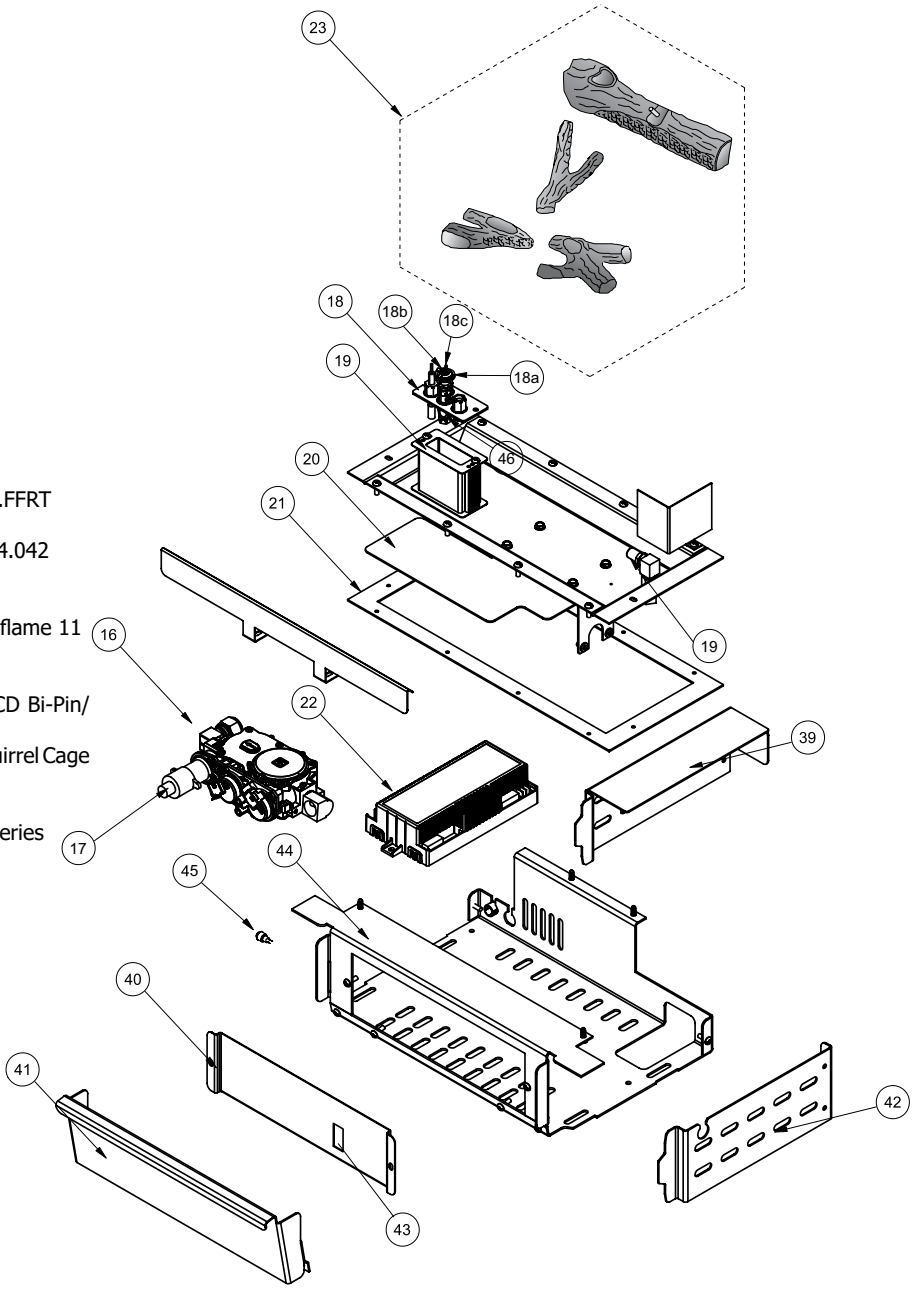

Limited Lifetime Warranty

FPI Fireplace Products International Ltd. (for Canadian customers) and Fireplace Products US, Inc. (for US customers) (collectively referred to herein as "FPI") extends this Limited Lifetime Warranty to the original purchaser of this Appliance provided the product remains in the original place of installation. The items covered by this Limited Lifetime Warranty and the period of such coverage are set forth in the table below.

An Appliance in this policy is defined as an Indoor Gas Fireplace, Indoor Gas Insert, Indoor Gas Freestanding Stove.

This Appliance has only been certified and listed for use indoors.**

This Limited Lifetime Warranty starts on the day the Appliance was purchased.

**Note: There are select models which are approved for both indoor/outdoor use. See specific product manuals for details.

The Limited Lifetime Warranty is not transferable, amendable or negotiable under any circumstances.

Indoor Gas Products Warranty Coverage Parts and Labor	**Limited Lifetime**	**5 years**	**2 years**	**1 year**	**Subsidized Labor Coverage* (Years)**
Firebox and Heat Exchanger	✓				3
Steel Burner Tube	✓				3
Glass Thermal breakage only	✓				3
All painted Surrounds/Inlays Finishes White/Black Chase Vents/Steel Framing Kits		✓			3
Brick Panels/Log sets/Ceramic Burners/Grates		✓			3
All Castings		✓			3
Valve assembly and all gas control components (Pilot assembly, flame sensors, Spark Electrode, Pilot Tubing, Orifices, Thermocouple, Thermopile)			✓		2
All Other Electrical components (Ignition Control Boards, Wiring, Wiring Harnesses, Lighting Wiring Assemblies, Switches, Blowers, Blower Control Module, Battery Pack, Remote Control Systems)			✓		2
Enamel Panels/Painted Steel Panels			✓		1
Venting/Venting Components			✓		1
All Stainless steel surrounds All black chrome Brushed nickel/Antique copper Faceplates/surrounds All Inner/Outer Black Glass panels				✓	1
All Firebox Media (Glass Crystals, Crushed Glass, Glass Fire beads, Volcanic, Ceramic, Spa Stones, River Pebbles, Fireballs)				✓	1
All hardware				✓	1
WIFI Dongle				✓	1
Mesh/Glass Safety Barriers				✓	1
Accent Light Bulbs				✓	1
Glass (Crazing)				✓	1

Note: Warranty coverage noted above may not be applicable as components/options vary based on appliance purchased.

Conditions:

Warranty protects against defect in manufacture or FPI factory-assembled components only, unless herein specified otherwise.

***This warranty does not cover dealer travel costs, mileage, fuel, tolls for diagnostic or service work. All labor rates paid to authorized dealers are subsidized, pre-determined rates. Dealers may charge you for travel and additional time beyond their subsidy.**

Any part(s) found to be defective during the warranty period as outlined above will be repaired or replaced at FPI's option through an accredited distributor, dealer or pre-approved and assigned agent; provided that the defective part is returned to the distributor, dealer or agent for

inspection if requested by FPI. Alternatively, FPI may, at its discretion, fully discharge all of its obligations under warranty by refunding the verified purchase price of the product to the original purchaser. The purchase price must be confirmed by the original Bill of Sale. **The authorized selling dealer, or an alternative authorized FPI dealer if pre-approved by FPI, is responsible for all in-field diagnosis and service work related to all warranty claims. FPI is not responsible for results or costs of workmanship of unauthorized FPI dealers or agents in the negligence of their service work.**

At all times, FPI reserves the right to inspect reported in the field/on location complaints of products claimed to be defective before processing or authorizing any claim. Failure to allow this upon request will void the warranty.

All warranty claims must be submitted by the dealer servicing the claim, including a copy of the Bill of Sale (proof of purchase by you). All claims must be complete and provide full details as requested by FPI to receive consideration for evaluation. **Incomplete claims may be rejected.**

Replacement Appliances to the original purchaser are limited to one per warranty term. Appliances must be installed according to all manufacturers' instructions as per the manual. All Local and National required codes must be met.

The installer is responsible for ensuring the Appliance is operating as designed at the time of installation.

The original purchaser is responsible for the annual maintenance of the Appliance, as outlined in the owner's manual. As outlined below, the warranty may be voided due to problems caused by a lack of maintenance.

Records/receipts of any maintenance completed on the appliance must be kept in case asked for when dealer submits a warranty claim.

Purchased parts: Repair/replacement parts purchased by the consumer from FPI after the original coverage has expired on the Appliance will carry a **90-day** warranty from the purchase date, valid with a receipt only. Any item shown to be defective will be repaired or replaced at our discretion. No labor coverage is included with these parts.

Special Finishes - One year on brushed nickel, black chrome and antique copper faceplates/surrounds. You can expect some changes in color as the product "ages" with constant heating and cooling. FPI warranties the product for any manufacturing defects on the original product. However, the manufacturer's warranty does not cover changing colors and marks, i.e. fingerprints, etc. applied after the purchase of the product. Damage from the use of abrasive cleaners is not covered by warranty.

If freight damage has been found either externally or internally, the dealer must be informed within 3 days. All claims as a result of damage must be submitted by the dealer servicing the claim, including a copy of the Bill of Sale (proof of purchase). All claims must be complete and provide full details as requested by FPI to receive consideration for evaluation. **Incomplete claims may be rejected.**

As this is a Limited Lifetime Warranty, if the Appliance needs to be replaced, the Appliance that was purchased at the time of sale might not be replaced with exactly the same model Appliance. In that case, FPI will replace your Appliance with one that is similar at the time of replacement under the terms of this Limited Lifetime Warranty, but ONLY in the event that an item covered by the Limited Lifetime Warranty is found to be defective. Please refer to the table on first page of this warranty for items covered by the Limited Lifetime Warranty. Product changes might be the result of the original Appliance being discontinued, changes in regulatory requirements, product advancements, etc., which are beyond the control of FPI. **This Limited Lifetime Warranty does not cover any installation costs, or costs associated with changes of required clearances for the replacement Appliance, hearth pads, mantles, facing and/or facing materials such as framing, completed walls made of drywall, wood, non-combustible board, tile, brick, stone, marble etc., venting/chimney systems, or components of the chimney system.**

If a suitable replacement is not available, FPI will refund **50%** of the purchase price of the Appliance and any applicable FPI accessories (faceplates, brick panels, media, etc.) purchased at the time of sale. **In no event will FPI refund any portion of the purchase price of, or reimburse costs associated with, any other items, including without limitation, installation of a new Appliance, changes of required clearances for a new Appliance, hearth pads, mantles, facing and/or facing materials such as framing, completed walls made of drywall, wood, non- combustible board, tile, brick, stone, marble etc., venting/chimney systems, or components of the chimney system. A copy of the receipt or bill of sale will be necessary to validate the purchase price.**

For appliances approved for both Indoor/Outdoor use:

Optional finishing trims and faceplate's may be used in the outdoor environment. Plated faceplates are not recommended for outdoor installation due to the high potential for oxidation to form on the surface. However, please note that some fading or corrosion will occur due to environmental exposure. This would also apply to the gas appliance. Rust/corrosion is not covered under the terms of the warranty policy.

Fan kits may be installed but are not recommended in areas where there is high humidity. The appliance must be vented the same as if installed indoors. Follow the same guidelines/venting parameters when this is installed outdoors. Horizontal termination caps must not discharge into the same space shared by the front of the appliance. Vertical termination caps are recommended.

Appliances approved for use outdoors must be installed in a weatherproof enclosure while still following all clearance to combustible materials as outlined in the appliance manual.

Exclusions:

This Limited Lifetime Warranty does not extend to paint, rust or corrosion of any kind due to a lack of maintenance or improper venting, combustion air provision, corrosive chemicals (i.e. chlorine, salt, air, etc.), door, valve, pilot, fan cover, pressure relief door or glass gasketing, batteries, color fading, carbon/sooting of the log sets due to use and does not cover lava rock, platinum/glowing embers, andiron black embers, vermiculite.

Malfunction, damage or performance-based issues as a result of environmental conditions, location, chemical damages, downdrafts, installation error, an installation by an unqualified installer, incorrect chimney components (including but not limited to cap size or type), operator error, abuse, misuse, use of improper fuels, lack of regular maintenance and upkeep, acts of God, weather-related problems from hurricanes, tornados, earthquakes, floods, lightning strikes/bolts or acts of terrorism or war, which result in a malfunction of the Appliance are not covered under the terms of this Limited Lifetime Warranty.

FPI has no obligation to enhance or modify any Appliance once manufactured (i.e. as products evolve, field modifications or upgrades will not be performed on existing Appliances).

Any Appliance showing signs of neglect or misuse will not be covered under the terms of this warranty policy and may void this warranty, including Appliances with rusted or corroded fireboxes that have not been reported as rusted or corroded within **three (3)** months of installation/purchase.

Appliances which show evidence of being operated while damaged, or with problems known to the purchaser and causing further damages will void this warranty.

Appliances where the serial no. has been altered, deleted, removed or made illegible will void this warranty.

Minor movement, expansion and contraction of the steel is normal and is not covered under the terms of this warranty.

Freight damages for products or parts are not covered under the terms of the warranty.

Products made or provided by other manufacturers and used in conjunction with the FPI Appliance without prior authorization from FPI may void this warranty.

Limitations of Liability:

The original purchaser's exclusive remedy under this warranty, and FPI's sole obligation under this Limited Lifetime Warranty, express or implied, in contract or in tort, shall be limited to replacement, repair, or refund, as outlined above. IN NO EVENT WILL FPI BE LIABLE UNDER THIS WARRANTY FOR ANY INCIDENTAL OR CONSEQUENTIAL COMMERCIAL DAMAGES OR DAMAGES TO PROPERTY. TO THE EXTENT PERMITTED BY APPLICABLE LAW, FPI MAKES NO EXPRESS WARRANTIES OTHER THAN THE WARRANTY SPECIFIED HEREIN. THE DURATION OF ANY IMPLIED WARRANTY IS LIMITED TO DURATION OF THE EXPRESSED WARRANTY SPECIFIED ABOVE. IF IMPLIED WARRANTIES CANNOT BE DISCLAIMED, THEN SUCH WARRANTIES ARE LIMITED IN DURATION TO THE DURATION OF THIS WARRANTY.

Some US states do not allow limitations on how long an implied warranty lasts, or allow exclusion or limitation of incidental or consequential damages, so the above limitations or exclusions may not apply to you.

Customers located outside the US should consult their local, provincial or national legal codes for additional terms, which may apply to this warranty.

How to Obtain Warranty Service:

Customers should contact the authorized selling dealer to obtain warranty service. In the event the authorized selling dealer is unable to provide warranty service, please contact FPI by mail at the address listed below. Please include a brief description of the problem and your address, email and telephone contact information. A representative will contact you to make arrangements for an inspection and/or warranty service.

Canadian Warrantor:

FPI Fireplace Products International Ltd.

6988 Venture St. Delta, British Columbia
Canada, V4G 1H4

U.S. Warrantor:

Fireplace Products US, Inc.

PO Box 2189 PMB 125

Blaine, WA

United States, 98231

Or contact the Regency Customer Care Centre at 1-800-442-7432 (phone) / 604-946-4349 (fax) /customerservice@regency-fire.com (e-mail)

Product Registration and Customer Support:

Thank you for choosing a Regency Fireplace. Regency strives to be a world leader in the design, manufacture, and marketing of hearth products. To provide the best support for your product, we request that you complete a product registration form at http://www.regency-fire.com/Customer-Care/Warranty-Registration.aspx within **ninety (90)** days of purchase.

Warranty Registration Card

Product Registration and Customer Support:

Thank you for choosing a Regency Fireplace. Regency strives to be a world leader in the design, manufacture, and marketing of hearth products. To provide the best support for your product, we request that you complete a product registration form found on our Web Site under Customer Care within ninety (90) days of purchase.

For purchases made in **CANADA or the UNITED STATES**:

http://www.regency-fire.com/Customer-Care/Warranty-Registration.aspx

For purchases made in AUSTRALIA:

http://www.regency-fire.com.au/Customer-Care/Warranty-Registration.aspx

You may also complete the warranty registration form below to register your Regency Fireplace Product and mail and/or fax it back to us, and we will register the warranty for you. It is important you provide us with all the information below in order for us to serve you better.

Warranty Registration Form (or Register online immediately at the above Web Site):

Warranty Details	
Serial Number (required):	
Purchase Date (required) (mm/dd/yyyy):	
Product Details	
Product Model (required):	
Dealer Details	
Dealer Name (required):	
Dealer Address:	
Dealer Phone #:	
Installer:	
Date Installed (mm/dd/yyyy):	
Your Contact Details (required)	
Name:	
Address:	
Phone:	
Email:	

For purchases made in CANADA:

FPI Fireplace Products International Ltd.
6988 Venture St.
Delta, British Columbia
Canada, V4G 1H4

Phone: 604-946-5155
Fax: 1-866-393-2806

For purchases made in the UNITED STATES:

Fireplace Products US, Inc.

PO Box 2189 PMB 125
Blaine, WA
United States, 98231

Phone: 604-946-5155
Fax: 1-866-393-2806

For purchases made in AUSTRALIA:

Fireplace Products Australia Pty Ltd
99 Colemans Road
Dandenong South, Vic.
Australia, 3175

Phone: +61 3 9799 7277
Fax: +61 3 9799 7822

For fireplace care and tips and answers to most common questions please visit our Customer Care section on our Web Site. Please feel free to contact your selling dealer if you have any questions about your Regency product.

recycling

PRODUCT LIFE CYCLE:
By recycling your used appliances, you divert waste from your local landfills and help the environment. You also reduce the need for raw materials to manufacture new products. Contact your local municipality for appliance recycling services, local recycling programs, or appliance removal services to ensure your Regency appliance components, and packaging are properly recycled.

Installer: Please complete the following information

Dealer Name & Address: _____

_____

Installer: _____

Phone #: _____

Date Installed: _____

Serial #: _____

H15 Product Video

Hampton is a trademark of FPI Fireplace Products International Ltd.

© Copyright 2025, FPI Fireplace Products International Ltd. All rights reserved.

Printed in Canada