Onyx REGENCY FIREPLACE PRODUCTS

Avita Electric

LED ELECTRIC FIRE RANGE

with Thermostatic Remote Control

Models: Onyx Avita EXA120/EXA160/EXA190

Instructions for Use & Installation
For use in US (United States) and CA (Canada)

IMPORTANT

THE HEATER OUTLET GRILLE BECOMES VERY HOT WHILE IN OPERATION. DO NOT COVER THE OUTLET GRILLE OR ANY PART OF THE APPLIANCE.

For use with 120V 60Hz electricity supply. Optional: 240V supply with hardwire installation only.

Please read these instructions carefully before installation.
Failure to follow them could result in serious injury.

SAVE THESE INSTRUCTIONS: Leave this manual with the appliance, they will be needed when maintenance or servicing is required.

THIS APPLIANCE MUST BE GROUNDED.

920-951 **08.27.26**

CONTENTS

ONYX AVITA - LED Electric Fire Range

Covering the following models:

EXA120	EXA160	EXA190
228-208	228-216	228-222

Welcome Note 3

User Instructions 4

Operating Instructions 6

Remote Control 7

Troubleshooting 12

Maintenance 13

Installation 14

Technical Specification 16

Hardwiring 19

Power Cord Conversion 22

Pre-Installation 23

Installation 25

Optional LED Mood Lighting 29

Accessing the Fuel Bed 30

Log Layout 31

Servicing Instructions 37

Servicing Requirements 37

Pairing The Remote Control 37

Removing Components 38

Replacing Components 54

Spare Parts List 56

Wiring Diagrams 58

Information Requirement For Electric Local Space Heaters 61

Warranty 62

WARRANTY

This product carries a 1 year warranty.
Please note that all warranties are effective from the date of purchase.

Full terms and conditions are detailed in the Warranty Statement on the Regency website www.regency-fire.com. In the event of any conflict of information the wording on the website shall prevail.

Important Note: Should any problems be experienced with your product, claims must first be submitted to the Dealer where the appliance was purchased from who will offer immediate assistance or contact Regency on your behalf.

IMPORTANT

The hand-held transmitter is configured in the factory with a unique signal code. The hand-held transmitter is ready for use once the 2 AA batteries are installed. If the handset loses it signal or needs to be replaced. See this manual for details.

DISPOSAL

Recycle in accordance with Code of Federal Regulations (CFR), Title 40, Part 273. This device is classified as electrical and electronic equipment
As such, it must not be disposed of with household waste.
At the end of its useful life please take this product to an appropriate recycling center or collection point. You can find your nearest recycling drop off point by contacting your locality's waste management office.

WARNING: Cancer and Reproductive Harm
www.P65Warnings.ca.gov
919-874

SAFETY ALERT KEY

WARNING! Indicates a hazardous situation which, if not avoided could result in death or serious injury. **CAUTION!** Indicates a hazardous situation which, if not avoided, could result in minor or moderate injury.

IMPORTANT

A 15 amp, 60Hz 120 Volt circuit is required for installation of this Appliance. A dedicated circuit is not required, but is highly recommended to prevent circuit breaker from tripping or fuse failure. Failure to provide adequate power to this Appliance will void your warranty. Optional: 240 VAC 2 phase 15A, 60Hz supply can be utilized. On 240 VAC option, this may only be hardwired.
NOTE: If hard wiring to the Appliance, this must be completed by a qualified electrician. Failure to do so will void your warranty.

IMPORTANT INSTRUCTIONS

When using electrical appliances, basic precautions should always be followed to reduce the risk of fire, electric shock, and injury to persons, including the following:
1. Read all instructions before installing or using this heater.
2. This heater is hot when in use. To avoid burns, do not let bare skin touch hot surfaces. Keep combustible materials, such as furniture, pillows, bedding, papers, clothes, etc. and curtains at least 3.3'/1m from the front of the heater and keep them away from the sides and rear.
3. Extreme caution is necessary when any heater is used by or near children or invalids and whenever the heater is left operating and unattended.
4. Do not operate any heater after it malfunctions. Disconnect power at service panel and have heater inspected by a reputable electrician before reusing.
5. Do not use outdoors.
6. To disconnect heater, turn controls to off, and turn off power to heater circuit at main disconnect panel (or operate internal disconnect switch if provided).
7. Do not insert or allow foreign objects to enter any ventilation or exhaust opening as this may cause an electric shock or fire, or damage the heater.
8. To prevent a possible fire, do not block air intakes or exhaust in any manner.
9. A heater has hot and arcing or sparking parts inside. Do not use it in areas where gasoline, paint, or flammable vapors or liquids are used or stored.
10. Use this heater only as described in this manual. Any other use not recommended by the manufacturer may cause fire, electric shock, or injury to persons.
11. This heater may include an audible or visual alarm to warn that parts of the heater are getting excessively hot. If the alarm sounds (or illuminates), immediately turn the heater off and inspect for any objects on or adjacent to the heater that may have blocked the airflow or otherwise caused high temperatures to have occurred. DO NOT OPERATE THE HEATER WITH THE ALARM SOUNDING (OR ILLUMINATING).
12. "SAVE THESE INSTRUCTIONS"

USER INSTRUCTIONS

ALWAYS check your appliance cord and plug connections with each use!
A. MAKE SURE the plug fits tight in the outlet! Faulty wall outlet connections or loose plugs can cause the outlet to overheat.
B. Appliances draw more current than small appliances. **Overheating** may occur even if it has not occurred with the use of other appliances.
C. During use **check frequently** to see if the **plug outlet** is HOT! If the outlet or faceplate is **HOT, discontinue use immediately** and have a qualified electrician inspect and/or replace the faulty outlets.
We take great care to ensure that our stoves are designed, tested and manufactured to the highest possible quality standards, and pride ourselves on offering the same exemplary after-sales service that goes above and beyond, assuring you years of enjoyment from your Onyx purchase.

SAVE THESE INSTRUCTIONS.

This device complies with Part 15 of the FCC Rules. Operation is subject to the following two conditions:

(1) This device may not cause harmful interference, and
(2) This device must accept any interference received, including interference that may cause undesired operation.

FCC warning:
Any Changes or modifications not expressly approved by the party responsible for compliance could void the user's authority to operate the equipment.

Note: This equipment has been tested and found to comply with the limits for a Class B digital device, pursuant to Part 15 of the FCC Rules. These limits are designed to provide reasonable protection against harmful interference in a residential installation. This product generates, uses, and can radiate radio frequency energy and, if not installed and used in accordance with the instructions, may cause harmful interference to radio communications. However, there is no guarantee that interference will not occur in a particular installation. If this product does cause harmful interference to radio or television reception, which can be determined by turning the equipment off and on, the user is encouraged to try to correct the interference by one or more of the following measures:

— Reorient or relocate the receiving antenna.
— Increase the separation between the equipment and receiver.
— Connect the equipment into an outlet on a circuit different from that to which the receiver is connected.
— Consult the dealer or an experienced radio/TV technician for help.

This equipment should be installed and operated with a minimum distance 8" (203 mm) between the radiator and your body. Refer to manual for a copy of the serial decal.

This device complies with Industry Canada licence-exempt RSS standard(s). Operation is subject to the following two conditions:
(1) this device may not cause interference, and
(2) this device must accept any interference, including interference that may cause undesired operation of the device.

Under Industry Canada regulations, this radio transmitter may only operate using an antenna of a type and maximum (or lesser) gain approved for the transmitter by Industry Canada. To reduce potential radio interference to other users, the antenna type and its gain should be so chosen that the equivalent isotropically radiated power (e.i.r.p.) is not more than that necessary for successful communication.

This appliance has been approved to the following standards:

- **ICES-003:Issue 6** - Information Technology Equipment (Including Digital Apparatus) -- Limits and Methods of Measurement
- **ANSI C63.4:2014** - American National Standard for Methods of Measurement of Radio-Noise Emissions from Low-Voltage Electrical and Electronic Equipment in the Range of 9 kHz to 40 GHz
- **ANSI C63.10:2013** - American National Standard of Procedures for Compliance Testing of Unlicensed Wireless Devices
- **47 CFR Part 15, Subpart B** - Radio Frequency Devices
- **47 CFR Part 15, Subpart C** 15.231 - Radio Frequency Devices
- **C22.2 No 46-13** - Electric Air Heaters
- **UL 2021 (4th Edition)** - Fixed and Location-Dedicated Electric Room Heaters
- **FCC Rules 15C** - Federal Communication Commission
- **RSP-100** - Labelling Requirements for IC
- **RSS-102 Issue 5 (March 2015)** - Radio Frequency (RF) Exposure Compliance of Radiocommunication Apparatus
- **RSS-210 Issue 9 (November 2017)** - Licence-Exempt Radio Apparatus: Category I Equipment
- **RSS-Gen Clause 4.6.1** - General Requirements for Compliance of Radio Apparatus

OPERATING INSTRUCTIONS

WARNING! Do not operate the appliance if it is damaged or has malfunctioned. If you suspect the appliance is damaged or has malfunctioned call a qualified service technician to inspect the appliance, and replace any part of the electrical system if necessary, before reuse. Do not disconnect the power at the main supply while the appliance is running. Use the functions on the remote to turn the fire off and ensure the on/off switch has been moved to the off position before disconnecting.

IMPORTANT
PARTS OF THE OUTER CASING OF THIS APPLIANCE ARE CONSIDERED BY THE MANUFACTURER TO BE A WORKING SURFACE WHICH BECOMES HOT WHEN THE HEATER IS SWITCHED ON. IT IS THEREFORE RECOMMENDED THAT A FIREGUARD COMPLYING WITH BS 8423 (LATEST EDITION) IS USED IN THE PRESENCE OF YOUNG CHILDREN, THE ELDERLY OR INFIRM. THE HEATER OUTLET GRILLE BECOMES VERY HOT WHILE IN OPERATION.
DO NOT COVER THE OUTLET GRILLE OR ANY PART OF THE APPLIANCE.
For use with 120V 60Hz electricity supply.
Optional: 240 VAC 2 phase 15A, 60Hz supply can be utilized. On 240 VAC option, this may only be hardwired.
Please read these instructions carefully before installation and keep them in a safe place.
They will be needed when maintenance or servicing is required.
THIS APPLIANCE MUST BE EARTHED
THIS PRODUCT IS ONLY SUITABLE FOR WELL INSULATED SPACES AND OCCASIONAL USE.

IMPORTANT INFORMATION AND HEALTH AND SAFETY

WARNING: Improper installation, adjustment, alteration, service or maintenance can cause injury or property damage. Refer to this manual. For assistance or additional information, consult a qualified installer.

Read all of the instructions carefully before using the appliance.
Remove all packaging and dispose of at an appropriate recycling facility.

Do not locate this appliance immediately below a fixed socket outlet.

Parts of the outer casing of this appliance are considered by the manufacturer to be a working surface which becomes hot when the heater is switched on. You must use a suitable fire guard to protect children, the elderly and the infirm.

Do not use this appliance in the immediate surroundings of a bath, shower, swimming pool or any other area where the appliance could come into contact with water or humidity, e.g. a bathroom.

WARNING! DO NOT COVER

Do not allow the appliance to be covered or let the air inlet/outlet become obstructed as the appliance may overheat. Please note the warning symbol on the appliance (see above).

For indoor use only. This appliance is not suitable for use outside the house.

This appliance must be installed in a purpose built studwork enclosure. Ensure the appliance is level and that furniture,curtains etc. are positioned no closer than 1m/3.3 feet.

Where the electricity supply cable has to pass through a fire place, stone surround etc. ensure suitable rubber bushes are fitted at possible wear points.

If installed in an open fireplace, blank off the chimney to reduce the risk of a back draught which can cause the safety cut-out to operate.

Keep the power cord away from hot surfaces and hot conditions. Do not route the power lead in front of the appliance.

When the fire has been installed the position of the plug must be accessible.

If the electricity supply cable is damaged do not use the appliance until it has been replaced. For safety reasons the replacement has to be carried out by a Onyx service agent or a similarly competent electrician.

To ensure that the paint is properly cured, it is recommended that you burn your electric fireplace for at least four (4) hours the first time with the heater on. During the first fire, the unit will release an odour caused by the curing of the paint and the burning off of oils remaining from manufacturing. Smoke detectors may go off at this time. Open windows to ventilate the room for a couple of hours.

CAUTION: In order to avoid a hazard due to inadvertent resetting of the thermal cut-out, this appliance must not be supplied through an external switching device, such as a timer, or connected to a circuit that is regularly switched on and off by the utility.

Do not operate the appliance if it is damaged.

Repairs of electrical appliances must only be performed by an electrical engineer. Should the appliance fail to operate,or in case of any damage, please contact the retailer from whom the appliance was purchased.

This appliance can be used by children aged from 8 years and above and persons with reduced physical, sensory or mental capabilities or lack of experience and knowledge if they have been given supervision or instruction concerning use of the appliance in a safe way and understand the hazards involved. Children shall not play with the appliance. Cleaning and user maintenance shall not be made by children without supervision.

Children of less than 3 years should be kept away unless continuously supervised.

Children aged from 3 years and less than 8 years shall only switch on/off the appliance provided that it has been placed or installed in its intended normal operating position and they have been given supervision or instruction concerning use of the appliance in a safe way and understand the hazards involved. Children aged from 3 years and less than 8 years shall not plug in, regulate and clean the appliance or perform maintenance.

Caution: Some parts of this product can become very hot and cause burns. Particular attention has to be given where children and vulnerable people are present.

However Regency recommend:

This appliance is not intended to be used by persons under the age of 12, persons with reduced physical, sensory or mental capabilities or persons with lack of experience and knowledge in the safe operation of the appliance.
The appliance may be operated by persons above the age of 12 provided they have been instructed in the safe use of the appliance and that they understand the hazards involved. Persons above the age of 12 may also operate the appliance under the supervision of a responsible adult.
Parts of this appliance become hot while in operation and under no circumstances should persons under the age of 12 be left alone with the product when it is in operation unless a suitable fireguard is used to protect them against the possibility of coming into direct contact with the appliance.
Children shall not play with the appliance.
Cleaning and user maintenance shall not be made by children without supervision.

OPERATING INSTRUCTIONS

WARNING! Do not operate the appliance if it is damaged or has malfunctioned. If you suspect the appliance is damaged or has malfunctioned call a suitably qualified service engineer to inspect the appliance, and replace any part of the electrical system if necessary, before reuse.

Do not disconnect the power at the mains supply <u>whilst the appliance is running</u>. Use the functions on the remote to turn the fire off and ensure the mains switch has been moved to the off position before disconnecting.

MANUAL CONTROL PANEL

NOTE: To use both remote and manual functions the manual on/off switch must be in 'ON' position.
To prevent the product overheating, there is a 10-second delay when turning on and off the heater fan.

The manual button controls basic functions.
Use the remote hand set to carry out all functions.

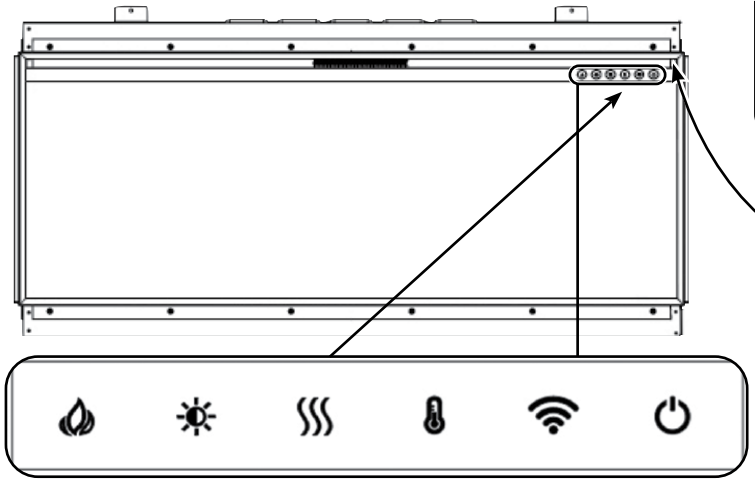

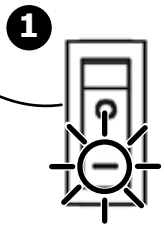

BUTTON	FUNCTION
OFF ON	**ON:** Turns on the standby mode. Enables all of the functions and remote control. **OFF**: Turns off all of the fireplace functions, and disables remote control.
POWER ON/OFF	Press to turn on the flame or turn off the fire. **CODING: Press the button until you hear two short beeps. Within 10 seconds, press the button on the remote to finish the coding.**
FLAME	Press to cycle through 5 levels of flame setting and flame off. Press button to adjust the brightness from 6.25-100%, total six settings including Off. Keep pressing for 3 seconds to turn off the "beep" sound for buttons and remote control.
BRIGHTNESS	Press to adjust the brightness for flame and fuel bed from 6.25-100%, total six settings including off.
HEATER	Press to cycle from COOL-LOW-HIGH-OFF. Keep pressing for 3 seconds: "BEEP" x 2 = NO "BEEP" =
TEMPERATURE	Press to adjust the desired temperature from the range of 16-28°C (60-82°F) and off. Keep pressing for 3 seconds for °C/°F
WIFI	Press to connect or disconnect the network.

REMOTE CONTROL

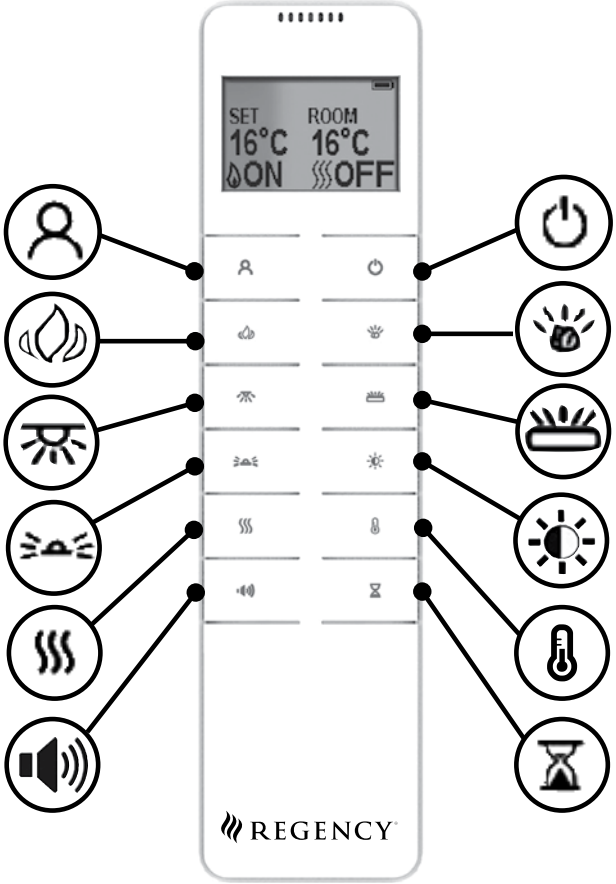

The remote control should be left on a flat surface in the room where the appliance is installed and away from any direct flow of hot air.

BUTTON	FUNCTION	ACTION
	POWER	The **POWER** button will turn the fireplace on, and enter standby mode. This will turn on/off all the functions at once but will hold the settings in memory.
	MY FLAME	Press the **MY FLAME** button to cycle through 8 flame settings.
	FLAME	Press to cycle through 5 levels of flame setting and flame off. Press button to adjust the brightness from 6.25-100%, total six settings including Off.
	GLOWING EMBERS	Press to cycle through Red - Ember - Yellow - Green – Cyan - Blue – Purple – White – 13 colour cycling – Off.
	DOWNLIGHT	Press to cycle the down light colour through Yellow – White – off. Press button to adjust the brightness from 6.25-100%, total six settings including Off.
	GLOWING LOGS	Press to cycle through Red – Ember – Yellow – off. Press button to adjust the brightness from 6.25-100%, total six settings including Off.

BUTTON	FUNCTION	ACTION
	AMBIENT LIGHT	Press the button to enter the **AMBIENT LIGHT** settings. The setting will cycle through Cold white-White-Warm White-Light Ember-Ember-Yellow-Gold-Red-Green-Cyan-Blue-Light Purple-Purple 13 colour cycling and off. Press button to adjust the brightness from 6.25-100%, total six settings including Off.
	BRIGHTNESS	Press to adjust the brightness from 6.25-100%, total six settings including off.
	HEATING	Press the **HEATING** button, and the heater will cycle the heat setting: AUT - COOL - LOW - HIGH - OFF. The AUTO heating will work after the weekly timer has been set in the MyFlame App
	TEMPERATURE	Press to adjust the desired temperature from the range of 16-28ºC (60-82ºF) and off. Keep pressing for 3 seconds for ºC/ºF
	SOUND	Press to cycle through HIGH - MIDDLE – LOW - OFF
	TIMER	Press the **TIMER** button to set the desired time for the fireplace to run. The Timer can be set 0.5H, 1.0H, and then each hour up to 10.0H.

OPERATING THE APPLIANCE - ADVANCED OPERATION

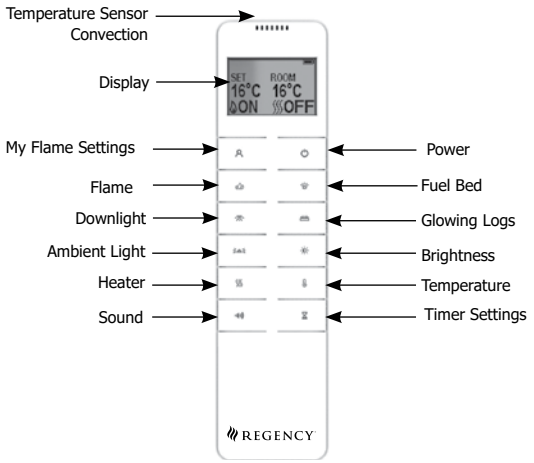

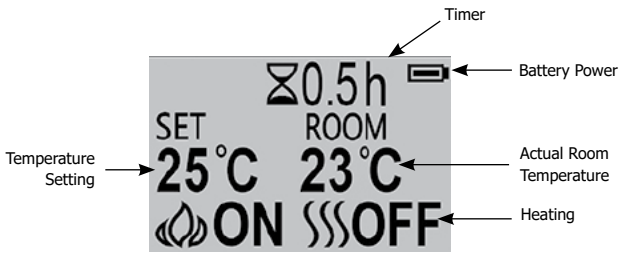

TURN ON/OFF

Press button to turn on the flame effect.

Press button to turn off all the functions under the manual heating control mode.

Press button to turn off the flame effect under AUTO heating mode.

MY FLAME COLOUR PRESETS

Press button and the Preset Number will appear.

There are 8 presets.

Press the ' ' to change the Preset.

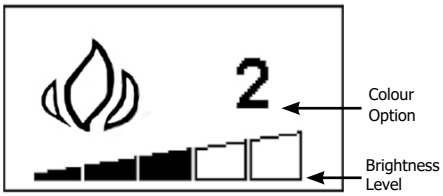

WEEK DAYS/ TIME/ TEMPERATURE AND UNIT SETTING

These settings can be set and control through the MyFlame app function.

ADJUSTING THE SET TEMPERATURE

Press the '' button to increase or decrease the temperature.

ADJUSTING THE SOUND

Press the ' ' button to cycle through HIGH - MIDDLE – LOW - OFF.

ADAPTIVE START CONTROL

The heater will automatically determine the appropriate time to heat to ensure that it will reach the set-pointed temperature at the set time.

FLAME COLOUR ADJUSTMENT

Press button.

There are 5 flame colour options including OFF.

There are 6 levels of brightness.

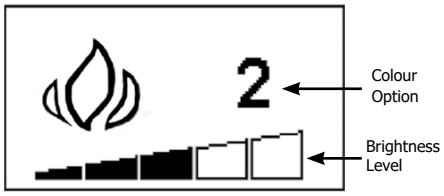

Press the ' ' button to cycle through the flame colour options.

Press button to adjust the brightness from 6.25-100%.

FUEL BED ADJUSTMENT

Press

There are 10 colour options including OFF.

There are 6 levels of brightness.

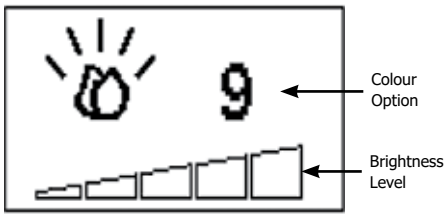

Press the ' ' button to cycle through the fuel bed colour options.

Press button to adjust the brightness from 6.25-100%.

DOWNLIGHT ADJUSTMENT

Press .
There are 3 colour options including OFF.
There are 6 levels of brightness.

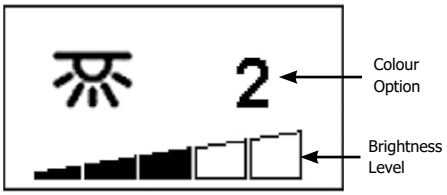

Press the ' ' button to cycle through the colour options.

Press button to adjust the brightness from 6.25-100%.

AMBIENT MOOD LIGHTING ADJUSTMENT

Press button.
There are 14 flame colour options including OFF.
There are 6 levels of brightness, including OFF.

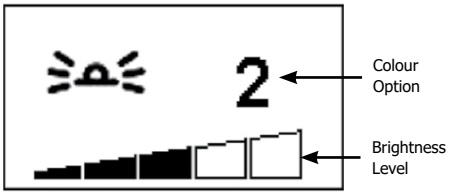

Press button to adjust the brightness from 6.25-100%.

GLOWING LOGS ADJUSTMENT

Press
There are 3 colour options including OFF.
There are 6 levels of brightness.

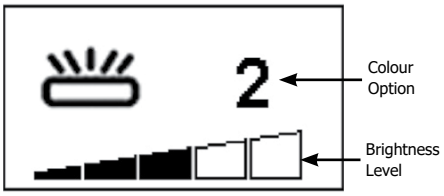

Press the ' ' button to cycle through the fuel bed colour options.

Press button to adjust the brightness from 6.25-100%.

WINDOW OPEN DETECTING

When the transmitter detects a rapid drop in room temperature, it will be judged as an open window: the warning icon will be displayed and the heating will be turned off automatically.

After indoor temperature rise or manual intervention (by operating remote control), it will return to normal working state.

COUNTDOWN TIMER

This setting is only in normal heating control mode. It allows the appliance to be returned to Standby after a set period of time. The heater must be switched on to use this function.

Press to cycle through the setting from Off and 0.5 hours to 10 hours. Timer logo and remaining time will show on the screen.

REGENCY ELECTRIC APP INSTRUCTIONS

APP SET UP

Downloading the Regency MUS Flame Electric App
Easily control your Regency Electric Fireplace's full range of features from your smart phone or tablet using the Regency Electric app. This easy-to-use app will unlock the full potential of these incredible electric fireplaces and is available on the Apple App Store or Google Play Store. **Locate the Regency Electric app by searching for MUS FLAME on Apple App Store or Google Play Store.**

Pairing Your Fireplace Automatically
1. Ensure "Auto Scan" is selected at the top of the screen.
2. If your fireplace is off, turn it on now.
3. The Wi-Fi connection on your electric fireplace will now need to be put to pairing mode to connect to the app.
4. To do this, press and hold the Wi-Fi button on the unit, for 3 seconds until a beep is heard and the fuel bed flashes to indicate that the fireplace is in pairing mode. When the fireplace icon is found on screen, click Next.
5. The app will now load and pair the fireplace with the app.
a. If you are having problems connecting automatically, try pairing the fireplace in Manual Mode.
6. Once connected, the fuel bed will glow a solid color. Click done to finish pairing the fireplace.
7. Turn on the fireplace using the power button next to your paired fireplace name.
8. Click on the fireplace name, and you will now enter the home screen to control the fireplace.

Pairing Your Fireplace Manually
1. Ensure "Add Manually" is selected at the top of the screen. Then choose option A. (choose option B or C if you are pairing a second or 3 fireplace in your home).
2. Enter your home Wi-Fi network and password and click Next. Repeat steps.
3. The Wi-Fi connection on your electric fireplace will now need to be put to pairing mode to connect to the app.
4. To do this, press and hold the Wi-Fi button on the unit, for 3 seconds until a beep is heard and the fuel bed flashes to indicate that the fireplace is in pairing mode. When the fireplace icon is found on screen, click Next.
5. The app will now load and pair the fireplace with the app.
6. Once connected, the fuel bed will glow a solid color. Click done to finish pairing the fireplace.
7. Turn on the fireplace using the power button next to your paired fireplace name.
8. Click on the fireplace name, and you will now enter the home screen to control the fireplace.

Adding Multiple Users for a Fireplace on the App
1. Connect your fireplace to the app.
2. From the Home Screen, click the edit button in the upper right corner.
3. Click "Share Device".
4. Click "Add Sharing".
5. Enter the email associated with the new user (email must match the email they used to sign up to the app).
6. The new user will get a notification that they have been added to the fireplace.

Set Temperature Units C/F
1. Click on the 3 bars in the top left corner to set your Temperature Units.
2. Depending on your preference, select either Celsius or Fahrenheit.

HOME SCREEN MANUAL CONTROLS

Power Button – Turns the fireplace on/off

Flame Button – Turns the flame on/off

Heater Button – Turns the heater on/off

Flame & Heating Adjustment – Manual & Automatic
1. To control the heating adjustments manually, use the circle scroll wheel in the center of the screen. The target temperature is displayed in the middle. The smaller button above indicates the current room temperature.
2. Ensure the left orange Flame button is set to Manual.
3. Ensure the right orange Heat button is either set to Low or High
4. To control the heating adjustments automatically, Ensure the left orange Flame button is set to Automatic. Ensure the right orange Heat button is set to Automatic.

*Note: To use automatic controls, the APP Power, Flame & Heat buttons must be turned on.

Timer Button
1. A basic timer can be set from the home screen by tapping the hourglass timer symbol.
2. Click on the numbers in the top right corner.
3. From here you can set the duration of time in which you want your fireplace to turn off.
4. Click Save or Cancel.
5. Click the icon again to remove the timer.

DROP DOWN MENU CONTROLS

Flame Adjustment – My Flame (Onyx Only)
1. To access My Flame settings, click on the 3 bars in the top left corner.
2. Select the My Flame button.
3. There are 6 pre-set flame palettes. Choose 1 of 6, or set your own using options 7-9.
4. To customize a flame to your liking – Choose 7, 8 or 9.
5. Go back to your menu & select your customization options (Main Flame, Flame Palette, Speed, Fuel Bed & Downlight).
6. Go back to My Flame and click "Save" then Click on the 7, 8 or 9 that you picked in above step.

Flame Adjustment – Main Flame/Flame
1. To access Main Flame Adjustment settings, click on the 3 bars in the top left corner.
2. Select the Main Flame button.
3. Use the scroll wheel to adjust the Flame color. Use the slider below to adjust the flame brightness. Use the second slide to adjust the flame speed.
4. You can also turn the Flame on or off using the toggle button.

Flame Adjustment – Flame Palette (Onyx Only)
1. To access Flame Palette Adjustment settings, click on the 3 bars in the top left corner.
2. Select the Flame Palette button.
3. Use the scroll wheel to adjust the Flame color. Use the slider below to adjust the flame brightness. Use the toggle button to match your Flame Palette to your Fuel Bed choice.
4. You can also turn the Flame on or off using the toggle button.

Flame Adjustment – Flame Speed (Onyx Only)
Same as Main Flame adjustments

Flame Adjustment – Fuel Bed
1. To access Fuel Bed settings, click on the 3 bars in the top left corner.
2. Select the Fuel Bed button.
3. Use the scroll wheel to select the Fuel Bed Color. Use the slider below to adjust the brightness.
4. You can also turn the Fuel Bed on or off using the toggle button.

Flame Adjustment – Glowing Logs (Onyx Only)
1. To access Glowing Logs Adjustment settings, click on the 3 bars in the top left corner.
2. Select the Glowing Logs button.
3. Use the scroll wheel to adjust the color. Use the slider below to adjust the brightness. Use the toggle button to match your Flame Palette to your Fuel Bed choice.
4. You can also turn the Glowing Logs on or off using the toggle button.

Flame Adjustment – Down Light (Onyx Only)
1. To access Down Light Adjustment settings, click on the 3 bars in the top left corner.
2. Select the Down Light button.
3. Use the scroll wheel to adjust the color. Use the slider below to adjust the brightness. Use the toggle button to match your Flame Palette to your Fuel Bed choice.
4. You can also turn the Glowing Logs on or off using the toggle button.

Flame Adjustment – Mood Light
1. Step 1 - To access Ambient Mood Light settings, click on the 3 bars in the top left corner.
2. Step 2 - Select the Mood Light button.
3. Step 3 - Use the scroll wheel to select the Ambient Mood Light Color. Use the slider below to adjust the brightness.
4. You can also turn the Mood Light on or off using the toggle button.

Set Flame Program

*Note: Ensure the left orange Flame button on the home screen is set to AUTO.
*Note: To use automatic controls, the APP Power, Flame & Heat buttons must be turned on.

1. To program your fireplace to turn on and off according to a set schedule, click the 3 bars in the top left corner and tap on Set Flame Program.
2. You can set a weekly timer for your flame up to 4 time periods a day according to 4 different weekly schedules.
3. Select the time slot and set the start and end times for when you would like your fireplace to turn on & off.
4. Ensure the time slot is active (indicated with a orange check mark).
5. Choose which days you would like the program to repeat on.
6. Tap save to save the program.

Set Heater Program
*Note: Ensure the right orange Heat button on the home screen is set to AUTO.
*Note: To use automatic controls, the APP Power, Flame & Heat buttons must be turned on.

1. To program your fireplace to heat according to a set schedule, click the 3 bars in the top left corner and tap on Set Heater Program.
2. You can set a weekly timer for your fireplace to heat at target temperatures up to 4 time periods a day according to 4 different weekly schedules.
3. Select the time slot and set the start and end times for when you would like your fireplace to heat. Click save.
4. Select the temperature slot and set the target temperature. Click save.
5. Ensure the time slot is active (indicated with a orange check mark).
6. Choose which days you would like the program to repeat on.
7. Tap save to save the program.

HOME MANAGEMENT

If you have multiple devices in your home, you may create a home to manage them all.

Create a "Home"
1. Click on the down arrow from the home screen.
2. Click on "Home Management".
3. Click on "Create a Home".
4. Enter a home name. Location is optional.
5. Click Save.
6. Now you can add multiple fireplaces to your home.

To Delete a User from your home
1. From the Home Screen, click the edit button in the upper right corner.
2. Click "Share Device".
3. Swipe Left on the user profile you want to delete.
4. Click Confirm.

TROUBLESHOOTING

1. If you are having problems pairing your fireplace, please clear the cache in the app.
   - o From the home screen - Go to "Me".
   - o Click on Settings icon in upper right corner.
   - o Click "Clear Cache".

2. Power Outages or Wifi Disruption
   - o If unit is on, but power was disconnected (ie power outage), press the wifi button 1 time to connect again (after power has been restored).
   - o If unit got turned off for maintenance or other reasons, turn the unit back on, then press the wifi button 1 time to connect again.
   - o If your cell phone wifi disconnects, the fireplace will remember your phone. There should not be a reason to reconnect to the fireplace.
   - o If your home wifi disconnects, you need to reset the unit & pair your phone to the unit all over again.

OPERATING THE APPLIANCE - TROUBLESHOOTING

BATTERY

The battery power level is indicated at the top right of the remote control screen.

	Battery Full	No action required
	Battery Half Power	Ensure new batteries are available.
	Battery Empty	Replace batteries immediately

NOTE: The remote control has a Battery Status indicator (top right corner), after an extended period of displaying empty the LED screen will cease to function despite the handset still being able to send commands.
Replace the batteries to restore display.

BATTERY REPLACEMENT

Exhausted batteries are to be removed from the appliance and safely disposed of.

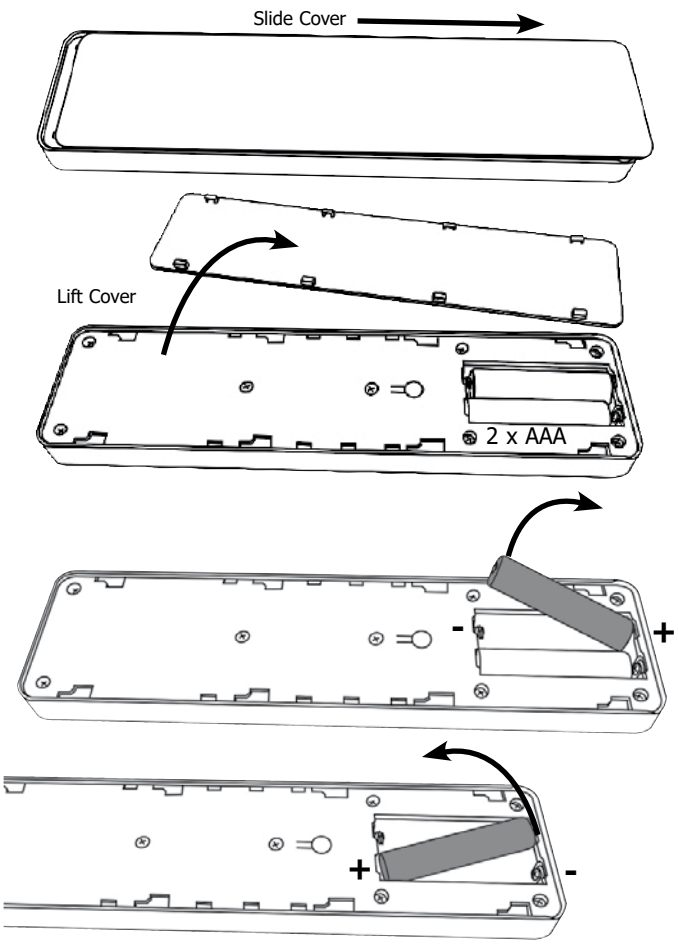

Ensure that the handset batteries are new and inserted correctly.

Dispose of old batteries at an appropriate recycling facility.

Battery replacement is recommended after 1 year.
The Remote requires two 1.5V alkaline AAA batteries.

Ensure the correct polarity.
Do not short circuit the terminals.

Note: Only use regular alkaline batteries. Do not use rechargeable or lithium batteries.

Do not attempt to recharge non-rechargeable batteries.

Do not mix old and new batteries.

IMPORTANT: Remove batteries if the appliance is not used for long periods.

NOTE: To use both remote and manual functions the manual on/off switch must be in 'ON' position. In order to prevent the product becoming too hot, there is 10s delay when turning on the heater and a 10s delay when turning off the heater fan.

The manual button controls basic functions, not a full range of controls. Use the remote hand set to carry out all functions.

RESET BUTTON FOR REMOTE CONTROL

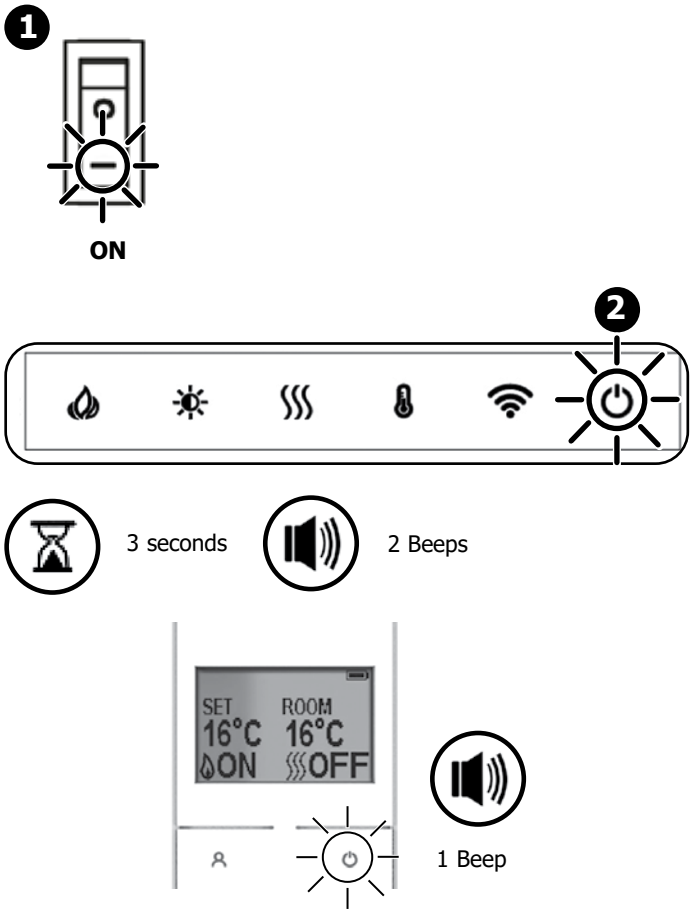

SIGNAL CODE

The handheld transmitter is configured in the factory with a unique signal code.

IMPORTANT: If the handset loses signal or needs to be replaced, see Servicing Instructions for details.

MAINTENANCE

ENSURE THE APPLIANCE IS TURNED OFF BEFORE CLEANING.

GLASS CLEANING

Wipe the glass viewing panel with a damp cloth and buff with a lint free duster.
Caution: Do not use abrasive cleaners on the glass panel. Do not spray liquids directly onto any surface of the unit.

CLEANING THE FUEL EFFECT

1 Remove the Phillips head screws as shown below.

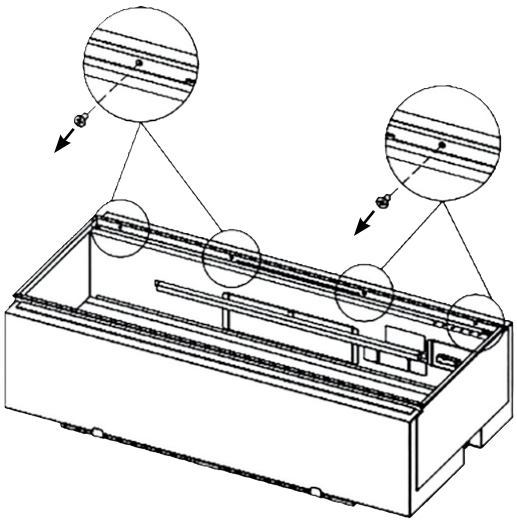

2

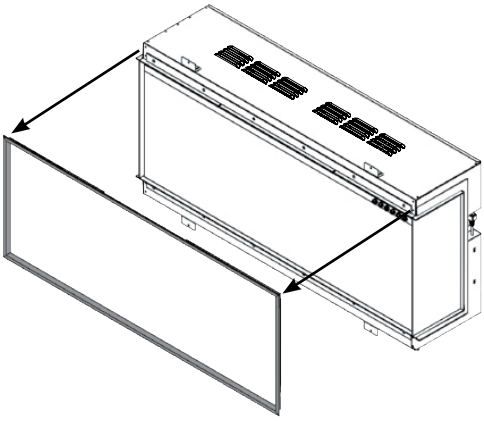

3

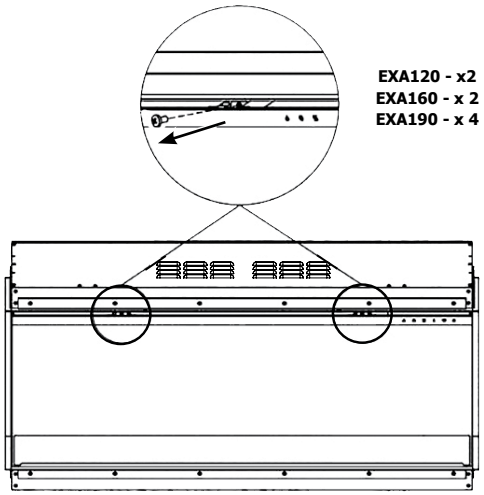

4

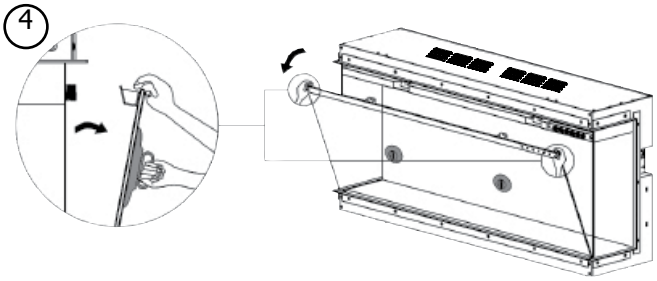

Remove the fuel effect to clean with a lint free duster.
Ensure that the effect is dry before replacing.

Replace the fuel effect see Installation Instructions for layout.

Replace in reverse order.

CLEANING AIR INLETS

Clean the air inlet and outlet grilles regularly with a soft cloth or the nozzle of a vacuum cleaner.

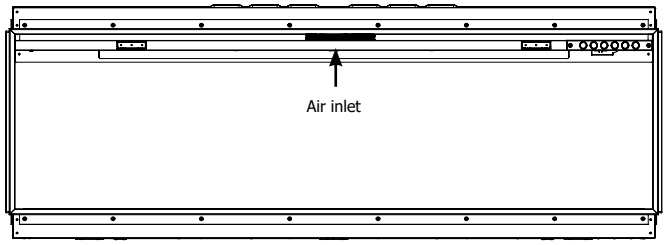

Dust build-up can inhibit efficient performance of the fan and lead to the safety cut-out operating.

Keep the area around the appliance clean and free of fluff, dust or pet hair.

In particular, build-up of dust etc. can occur around the heater area. Take particular care to keep this area free from such particles on a regular basis to prevent build-up.

INSTALLATION

GENERAL

TOOLS REQUIRED

A Screwdriver, Spirit Level, Saw and Drill will be needed.

UNPACKING THE FIREPLACE

WARNING! DO NOT use this appliance if any part has been exposed to water.

Immediately call a qualified service technician to inspect and to replace any part of the electrical system if necessary.

Open the packaging carefully and remove the polystyrene.
Remove and discard the plastic bag.
Keep plastic wrapping away from children.
Be responsible when handling the packing materials.

Check all parts and accessories are removed before disposing of any packaging.
If necessary keep the original packaging for future transport and/or storage.

Test the appliance before installation.

SAFETY LABEL

This is a copy of the serial decals that accompanies each EXA120/EXA160/EXA190 Electric Fireplace. We have printed a copy of the serial decal contents for your review shown to the right for each model.
The serial # will be 11 digits beginning with prefix of 228.
Example only shown below.
Serial # EXA120 - 228-20800000
Serial # EXA160 - 228-21600000
Serial # EXA190 - 228-22200000

Note:The actual serial decal will be located as per the safety label location shown below.
NOTE: Regency® units are constantly being improved. Check the label on the unit and if there is a difference, the label on the unit is the correct one.

SERIAL DECALS

EXA120

REGENCY FIREPLACE PRODUCTS
Delta, British Columbia, V4G 1H4
WARNING: DISCONNECT FROM POWER BEFORE SERVICING PRODUCT
AVERTISSEMENT : DÉBRANCHER AVANT L'ENTRETIEN

MODEL No. / MODÈLE No.	228-208
SERIAL No. / No de SÉRIE	
VOLTAGE / TENSION	120V ~ /240V ~, 60Hz
POWER / PUISSANCE	1400W/2800W
CURRENT / COURANT	11.6A
WEIGHT / POIDS	113.2LB

273424 C US
FCC ID: 2AQ6Y-AVITA
IC: 24306-AVITA
CAN ICES-3(B)/NMB-3(B)
Stovax Gazco Ltd, Skypark, Spitfire Ave, Exeter EX5 2FR, UK
PR3210

EXA160

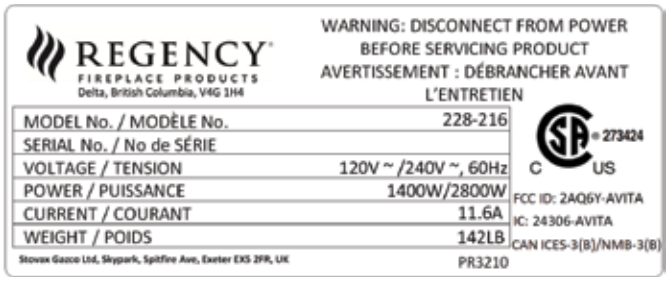
REGENCY FIREPLACE PRODUCTS
Delta, British Columbia, V4G 1H4
WARNING: DISCONNECT FROM POWER BEFORE SERVICING PRODUCT
AVERTISSEMENT : DÉBRANCHER AVANT L'ENTRETIEN

MODEL No. / MODÈLE No.	228-216
SERIAL No. / No de SÉRIE	
VOLTAGE / TENSION	120V ~ /240V ~, 60Hz
POWER / PUISSANCE	1400W/2800W
CURRENT / COURANT	11.6A
WEIGHT / POIDS	142LB

273424 C US
FCC ID: 2AQ6Y-AVITA
IC: 24306-AVITA
CAN ICES-3(B)/NMB-3(B)
Stovax Gazco Ltd, Skypark, Spitfire Ave, Exeter EX5 2FR, UK
PR3210

EXA190

REGENCY FIREPLACE PRODUCTS
Delta, British Columbia, V4G 1H4
WARNING: DISCONNECT FROM POWER BEFORE SERVICING PRODUCT
AVERTISSEMENT : DÉBRANCHER AVANT L'ENTRETIEN

MODEL No. / MODÈLE No.	228-222
SERIAL No. / No de SÉRIE	
VOLTAGE / TENSION	120V ~ /240V ~, 60Hz
POWER / PUISSANCE	1400W/2800W
CURRENT / COURANT	11.6A
WEIGHT / POIDS	166.45LB

273424 C US
FCC ID: 2AQ6Y-AVITA
IC: 24306-AVITA
CAN ICES-3(B)/NMB-3(B)
Stovax Gazco Ltd, Skypark, Spitfire Ave, Exeter EX5 2FR, UK
PR3210

Manufactured by:
Gazco Limited, Spitfire Avenue, Skypark, Clyst Honiton, Exeter, Devon, England EX5 2FR

LOCATION OF SERIAL DECAL

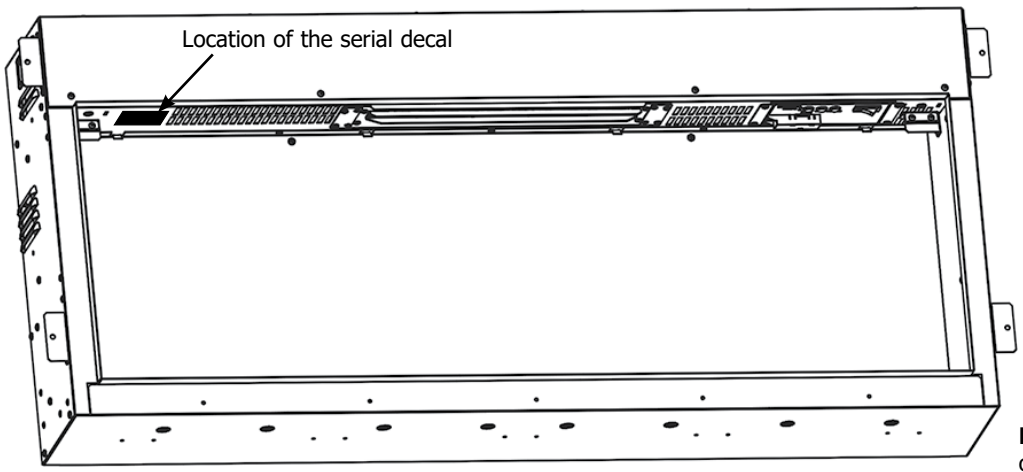

Note: For illustration purposes only. May not be exactly as shown.

FITTING THE APPLIANCE

LOCATING THE AVITA

Your new Avita may be installed virtually anywhere in your home. However, when choosing a location ensure that the general instructions are followed.

For best results, install out of direct sunlight.

The heater should ideally be fitted into/onto an internal flat wall constructed from either studwork and plasterboard block/brick. The fixings provided are for use on brick walls ONLY. Please ensure that suitable fixings are used when securing to any hollow or purpose built cavity.
NOTE: This appliance is not suitable for fitting to a Cavity Wall, backing on to an outside wall, an open chimney or any opening that may be subject to damp and draft, unless adequate precautions are taken to avoid the appliance coming into contact with moisture or excessive drafts. In such installations, any existing chimney and/or purpose provided air vents should be fully sealed.

Make sure there are no pipes or cables behind the area to be drilled or cut.

Always ensure the appliance is adequately supported and sits on a firm structure when mounting above floor level.

The appliance is supplied with a 3 prong plug with a 72" lead which is included with the manual package, it will need to be modified for hard wiring.
Note: Must be plugged into a 3 prong receptacle which is exposed and accessible. Do not under any circumstances, cut the ground on the 3 prong plug.

IMPORTANT: A 15 AMP, 60Hz circuit is required for 120 VAC installation. Additional appliances on the same circuit may exceed the current rating of that circuit. A dedicated circuit is not required but is preferred to prevent circuit breaker from tripping.

Optional: 240 VAC 2 phase 15A, 60Hz supply can be utilized. On 240 VAC option, this may only be hardwired.

The appliance should ideally be located close to a suitable receptacle to enable connection. An extension could be run from an existing socket outlet but this must be carried out by a suitably qualified electrical engineer.
The electrical receptacle must be easily accessible to allow disconnection when the appliance is fitted.

If the power cord is damaged, it must be repaired by an authorised service centre or professional person.

Ensure that curtains and furniture are not positioned close to the chosen position, as this would create a potential fire hazard or block the heater outlet ducts.

WARNING! KEEP ALL COMBUSTIBLE MATERIALS AT LEAST 1M FROM THE FRONT OF THE ELECTRIC FIREPLACE.

TECHNICAL SPECIFICATION

EXA120	EXA160	EXA190
228-208	228-216	228-222

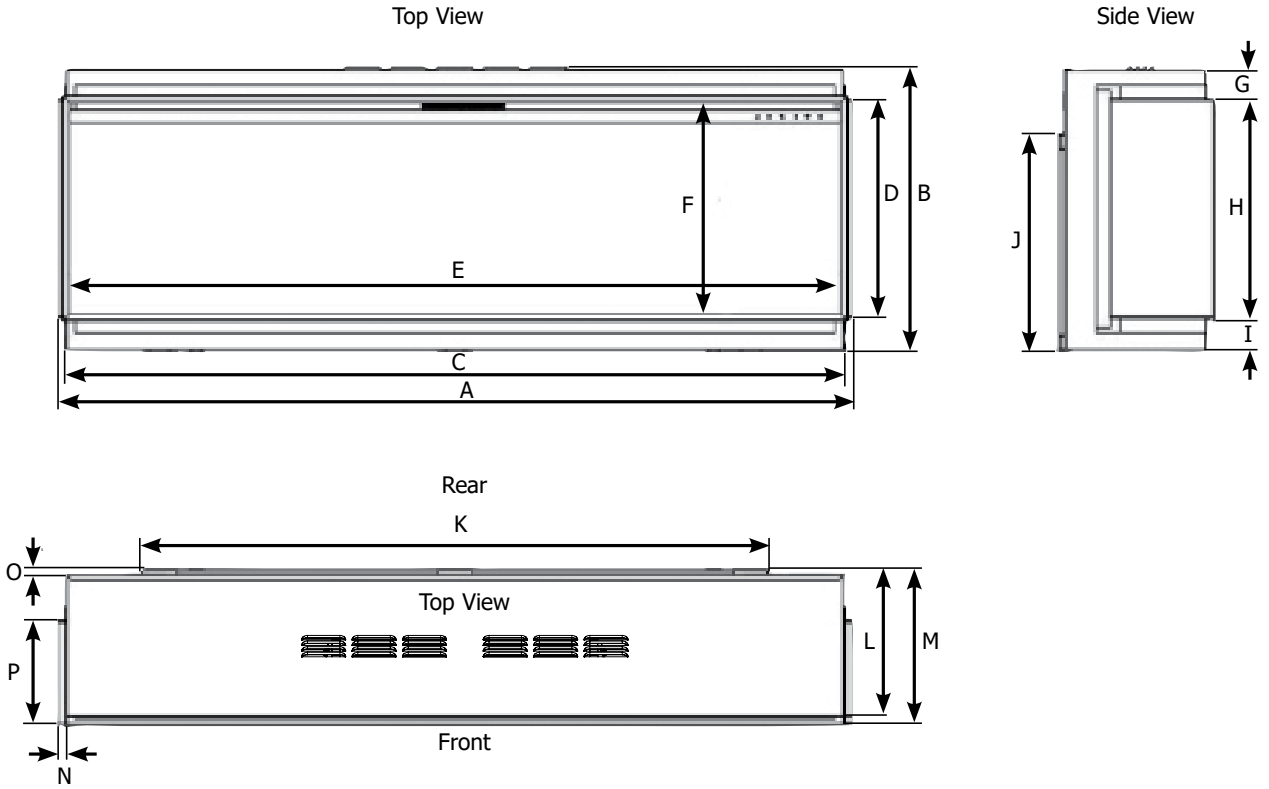

MODELS	A	B	C	D	E	F	G
EXA120	48-5/16" 1227 mm	22-7/8" 581 mm	47-1/4" 1200 mm	17-3/4" 1451 mm	46-9/16" 1183 mm	17-1/8" 435 mm	2-3/8" 60 mm
EXA160	64" 1626 mm	22-7/8" 581 mm	63" 1600 mm	17-3/4" 1451 mm	62-5/16" 1583 mm	17-1/8" 435 mm	2-3/8" 60 mm
EXA190	75-13/16" 1926 mm	22-7/8" 581 mm	74-13/16" 1900 mm	17-3/4" 1451 mm	74-1/8" 1883 mm	17-1/8" 435 mm	2-3/8" 60 mm

MODELS	H	I	J*	K*	L	M	N	O	P
EXA120	17-3/4" 451 mm	2-1/2" 63 mm	17-1/2" 445 mm	33-15/16" 862 mm	11-7/6" 291 mm	12-1/2" 317 mm	5/8" 16 mm	7/16" 11 mm	8-3/8" 212 mm
EXA160	17-3/4" 451 mm	2-1/2" 63 mm	17-1/2" 445 mm	50-9/16" 1284 mm	11-7/6" 291 mm	12-1/2" 317 mm	5/8" 16 mm	7/16" 11 mm	8-3/8" 212 mm
EXA190	17-3/4" 451 mm	2-1/2" 63 mm	17-1/2" 445 mm	69-1/2" 1765 mm	11-7/6" 291 mm	12-1/2" 317 mm	5/8" 16 mm	7/16" 11 mm	8-3/8" 212 mm

*Wall Mounting Bracket

CLEARANCE TO COMBUSTIBLES

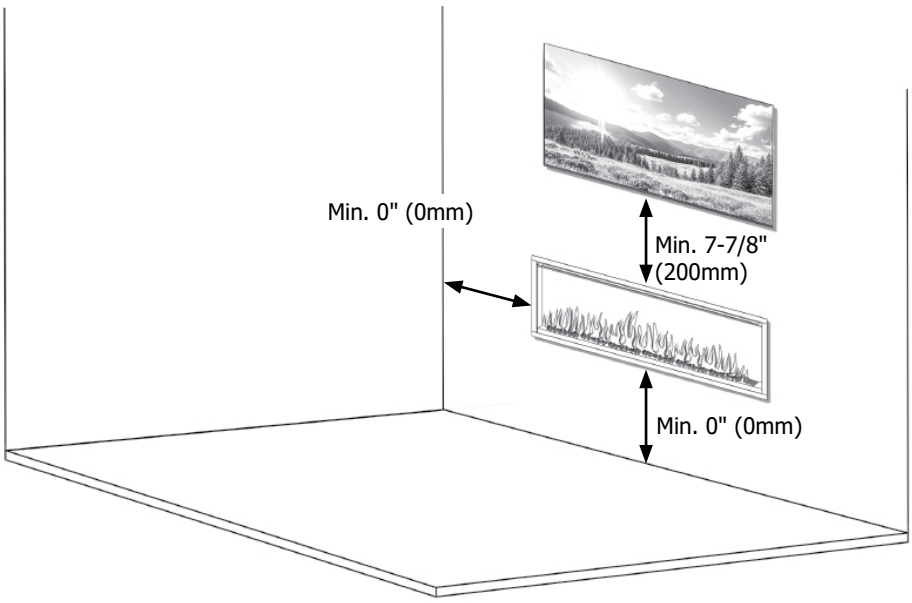

TOP (Mantel or TV)	7-7/8" (200mm) Minimum	**FRONT**	3 feet (1 m) Minimum (Directly in front of appliance)

TECHNICAL SPECIFICATION

CONTROL SYSTEM TECHNICAL DATA

	MAIN CONTROL BOARD	REMOTE RECEIVER BOARD	REMOTE CONTROL	WI-FI RECEIVER BOARD
Hardware	20260115	20200618	20210812	20200704
Software	V02.001	-	VA0.41	V3.1.23
Frequency	24MHz	433MHz	433MHz	2.4GHz
Maximum Transmit Power	-	13dBm	13dBm	17.5dBm

120VAC
EXA120/EXA160/EXA190: 1400 Watts.
Maximum power consumption: 120VAC 15 Amp 60Hz.
240VAC
EXA120/EXA160/EXA190 : 2800 Watts
Rated power consumption: Optional:(Hardwire only) 240V 2 phase 15A 60Hz supply can be utilized.

A 2 m (79") lead with plug is supplied.
2 x Remove control handset battery (AAA).

IMPORTANT: A 15 amp, 60Hz 120 Volt circuit is required for installation of this Appliance. A dedicated circuit is not required, but is highly recommended to prevent circuit breaker from tripping or fuse failure. Failure to provide adequate power to this Appliance will void your warranty.

NOTE: If hard wiring to the Appliance, this must be completed by a qualified electrician. Failure to do so will void your warranty.
The wiring from the appliance to the breaker must be supplied by a qualified electrician. This is not supplied with the appliance.

PACKING CHECKLIST

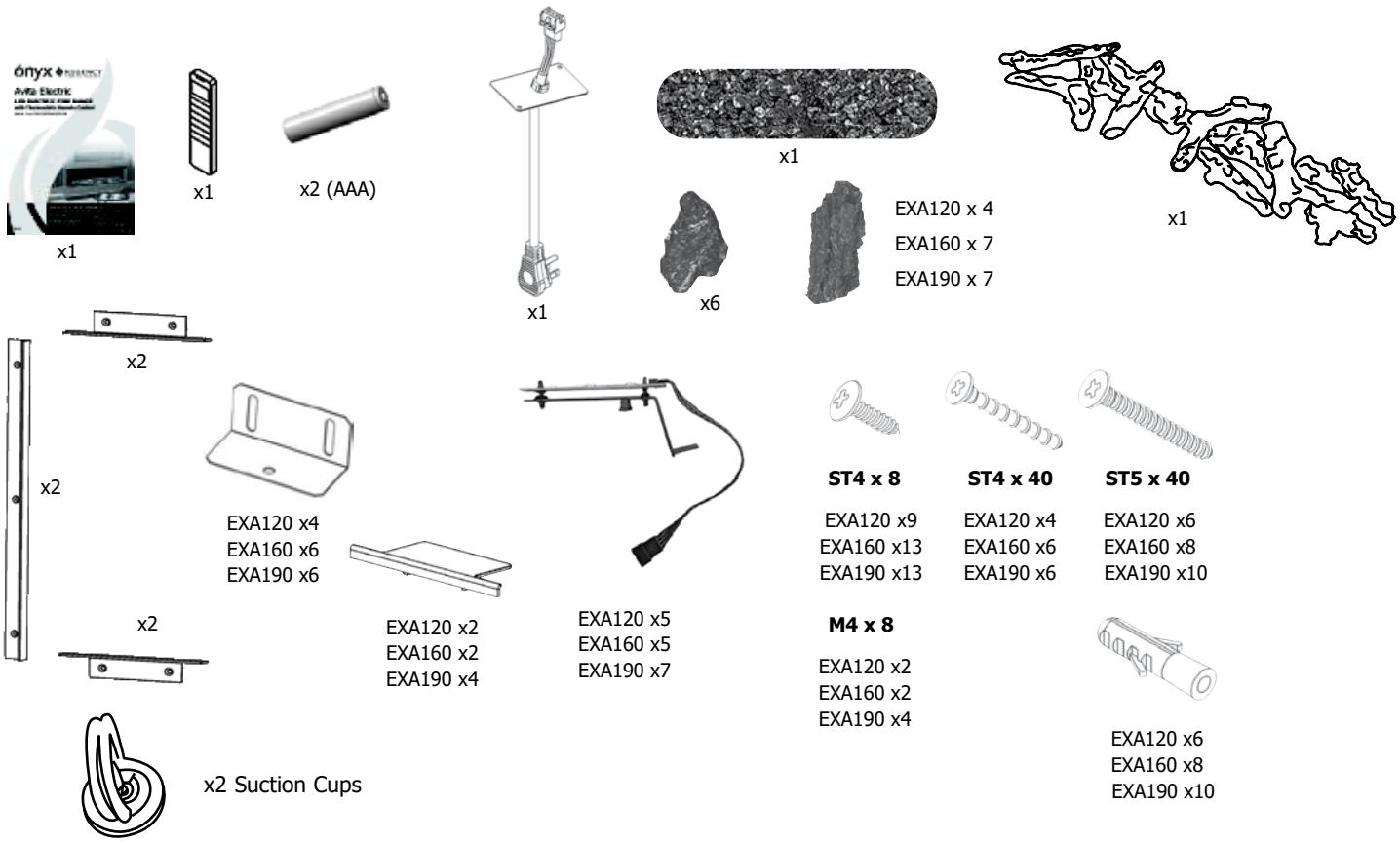

WIRING KITS

The appliance is supplied with a 3 prong plug with a 72" lead which is included with the manual package, it will need to be modified for hard wiring.
Note: Must be plugged into a 3 prong receptacle which is exposed and accessible. Do not under any circumstances, cut the ground on the 3 prong plug.

This appliance is for use on 120 Volts when using a 3-prong plug. The cord has a plug as show in (A). An adapter as shown in (C) is available for connecting three-blade grounding type plugs to two slot receptacles. The green grounding lug extending from the adapter must be connected to a permanent ground such as a properly grounded outlet box. The adapter should not be used if a three-slot grounded receptacle is not available.

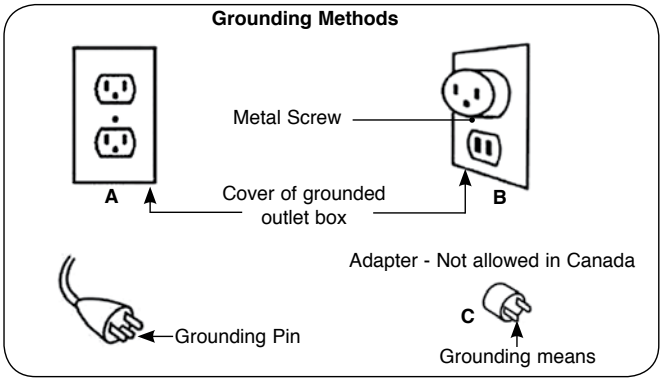

To disconnect the appliance, turn the controls to off, then remove plug from outlet.

This appliance must be connected and grounded in accordance with local codes, if hard wired. In the absence of local codes, the use the current CSA C22.1 CANADIAN ELECTRICAL CODE in Canada or the current ANSI/NFPA 70 NATIONAL ELECTRICAL CODE in the United States.

HARD WIRING

Note: The wiring from the appliance to the breaker & Strain relief must be supplied by a qualified electrician. This is not supplied with the appliance.

FOR 120VAC APPLICATIONS:

IMPORTANT: A 15 AMP, 60Hz circuit is required for 120 VAC installation. Additional appliances on the same circuit may exceed the current rating of that circuit. A dedicated circuit is not required but is preferred to prevent circuit breaker from tripping.

1. Locate the power supply which will be located on the right-hand side if facing the front of the appliance. The location will vary depending on model. It may be located at either the bottom or top as shown below.

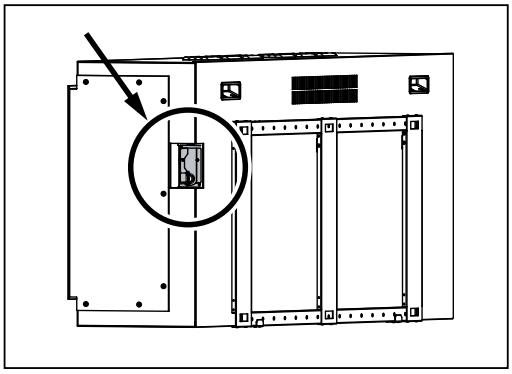

2. Remove the wire harness & cover plate from the appliance by removing the two Philip head screws from the side of the appliance as shown below. Disconnect the Molex connector and remove the wire harness & cover plate.

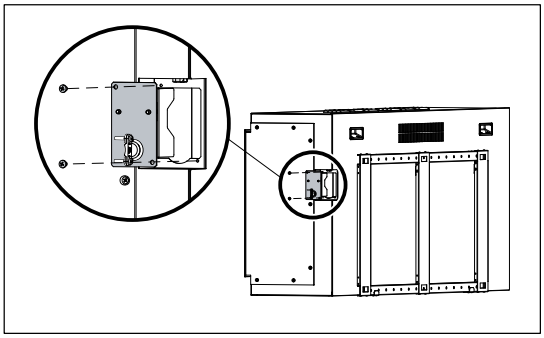

3. Using the same wire harness & cover plate removed in step 2, connect your BX Cable or similar (3 Wire) & metal strain relief (Both supplied by others) to the back of the wire harness & cover plate as shown below. When Connecting the BX Cable to the back of the hardwire cover plate you will need a small screwdriver (slot) to push down the back tabs this will open the slot the wire goes into. Remove the screwdriver to lock the wire in place.

Note: When stripping back the wires ends from the BX cable, they should be stripped back appropriately 1/2" (13 mm).

The following instructions must be followed to install a 3 wire NM-B Romex cable to the terminal block.

a. Connect the ground wire (green/copper) to the ground terminal (yellow).

b. Connect the line input neutral wire (white) to the N terminal (white).

c. Connect the line input voltage wire (black) to the L1 terminal (black).

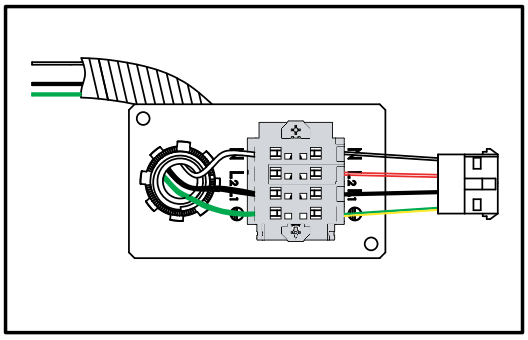

4. Once all three wires from the BX cable or similar have been connected to the hardwire & Cover plate, reconnect the molex connector removed in step 2. (black to black, yellow to yellow, red to red, white to white). Carefully push the wires back into the cavity that houses the wires and secure the wire harness & cover plate to the appliance with the Philip head screws (x2) removed in step 2.

5. Feed wire from appliance to breaker /power source.

FOR 240VAC APPLICATIONS:

1. Locate the power supply which will be located on the right-hand side if facing the front of the appliance. The location will vary depending on model. It may be located at either the bottom or top as shown below.

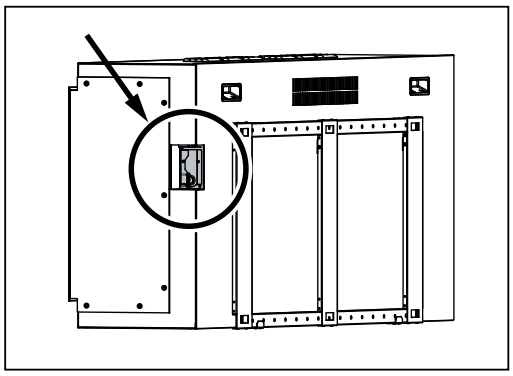

2. Remove the wire harness & cover plate from the appliance by removing the two Philip head screws from the side of the appliance as shown below. Disconnect the Molex connector and remove the wire harness & cover plate.

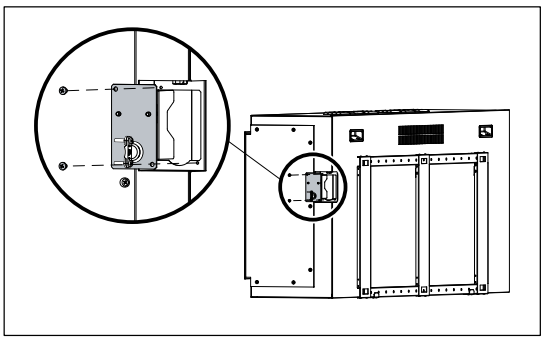

3. Using the same wire harness & cover plate removed in step 2, connect your BX Cable or similar (4 Wire) & metal strain relief (Both supplied by others) to the back of the wire harness & cover plate as shown below. When Connecting the BX Cable to the back of the hardwire cover plate you will need a small screwdriver (slot) to push down the back tabs this will open the slot the wire goes into. Remove the screwdriver to lock the wire in place.
Note: When stripping back the wires ends from the BX cable, they should be stripped back appropriately 1/2" (13 mm).
The following instructions must be followed to install a 4 wire NM-B Romex cable to the terminal block.

a. Connect the ground wire (green/copper) to the ground terminal (yellow).

b. Connect the line input neutral wire (white) to the N terminal (white).

c. Connect the line input wire (black) to the L1 terminal (black).

d. Connect the line input wire (red) to the L2 terminal (red).

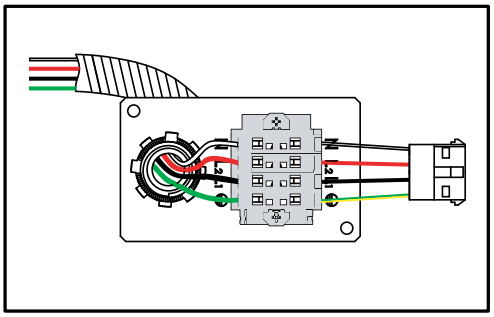

4. Once all four wires from the BX cable or similar have been connected to the hardwire & Cover plate, reconnect the molex connector removed in step 2. (black to black, yellow to yellow, red to red, white to white). Carefully push the wires back into the cavity that houses the wires and secure the wire harness & cover plate to the appliance with the Philip head screws (x2) removed in step 2.

5. Feed wire from appliance to breaker /power source.

120VAC/OFF/240VAC SELECTOR SWITCH

IMPORTANT
Ensure that the correct voltage is selected on the selector switch located inside the unit. Failure to do so could damage the product. The selector switch must be in either the 120 volt or 240 Volt location depending on the power supply to the appliance.
NOTE: If the selector switch is left in the OFF position an error code will appear on the back inner screen which will be ER 1. The only way this can be removed is by selecting either the 120/240 volt on the selector switch.
To access the selector switch follow the steps below.

1. Remove the Phillips head screws as shown below.

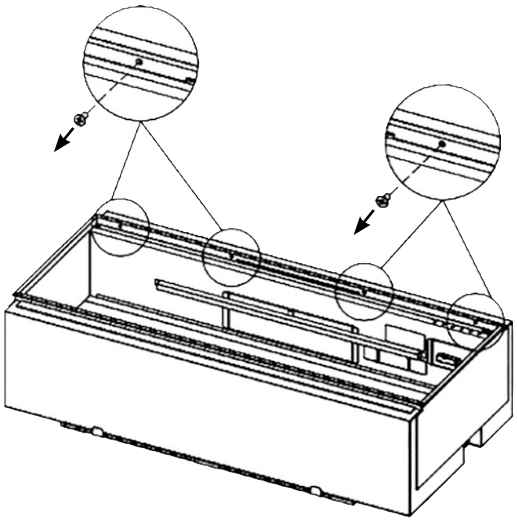

2. Pull the finishing trim out towards you.

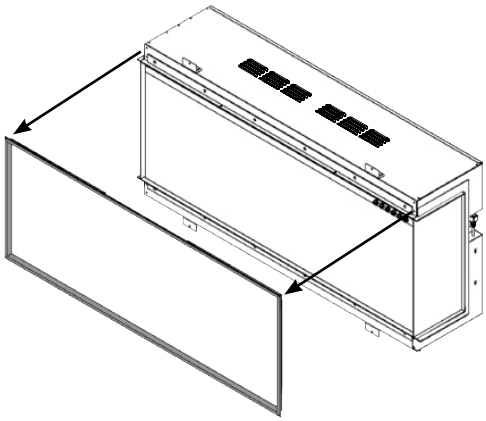

3 To remove the glass, remove Phillips head screws as per quantities noted below based on model and put screws to the side.

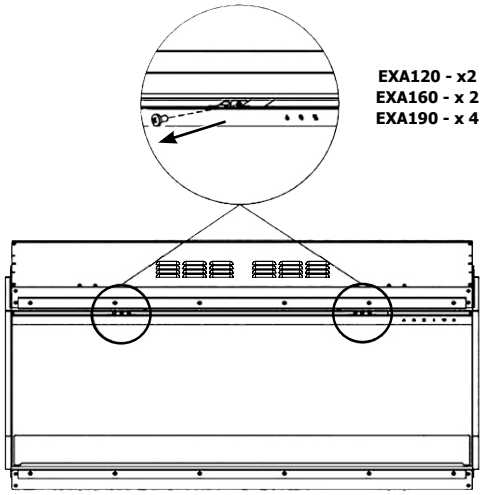

4 Tilt glass back using the suction cups provided and put glass to the side on a soft cloth.

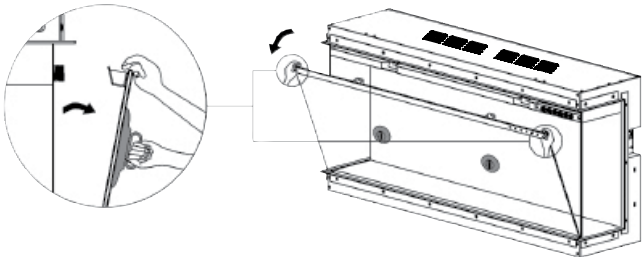

5 The 120VAC/OFF/240VAC SELECTOR SWITCH will be located in the location shown below. The selector switch must be in either the 120 volt or 240 Volt location depending on the power supply to the appliance.

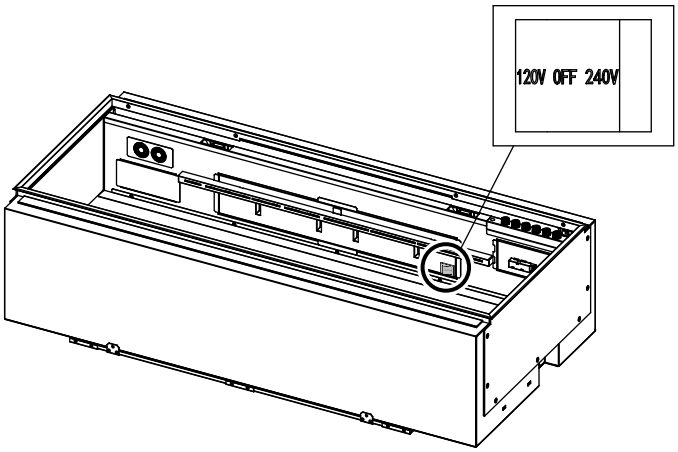

6 Install log set & media and reverse steps 1-4.

POWER CORD CONVERSION

IMPORTANT: A 15 AMP, 60Hz circuit is required for 120 VAC installation. Additional appliances on the same circuit may exceed the current rating of that circuit. A dedicated circuit is not required but is preferred to prevent circuit breaker trips.

1. Locate the power supply which will be located on the right-hand side if facing the front of the appliance. The location will vary depending on model. It may be located at either the bottom or top as shown below.

Bottom Location

Top Location

2. Remove the wire harness & cover plate from the appliance by removing the two Philip head screws from the side of the appliance as shown below. Disconnect the Molex connector and remove the wire harness & cover plate. Once removed recycle or keep the wire harness & cover plate for future use.

3. Locate the 120 VAC power cord which will be in the manual package that accompanied the appliance. Connect the 120 VAC power cord option to the Molex connector on the appliance (white to white, black to black, green to yellow).

4. Install the wire harness & cover plate and 120 VAC power cord to the appliance and secure with the 2 x Philip head screws removed in step 2.

Wire Harness & Cover Plate Reinstalled.

5. **Note:** The appliance must be plugged into a 3 prong receptacle which is exposed and accessible. Do not under any circumstances, cut the ground on the 3-prong plug.

PRE-INSTALLATION

DECORATIVE FINISHING TRIM

The decorative finishing trim is only used when installing as single sided appliance.
If choosing to install as a 2-sided corner (left/right) or 3-sided bay, the decorative finishing trim is not used and is recycled.

1 Remove the Phillips head screws as shown below.

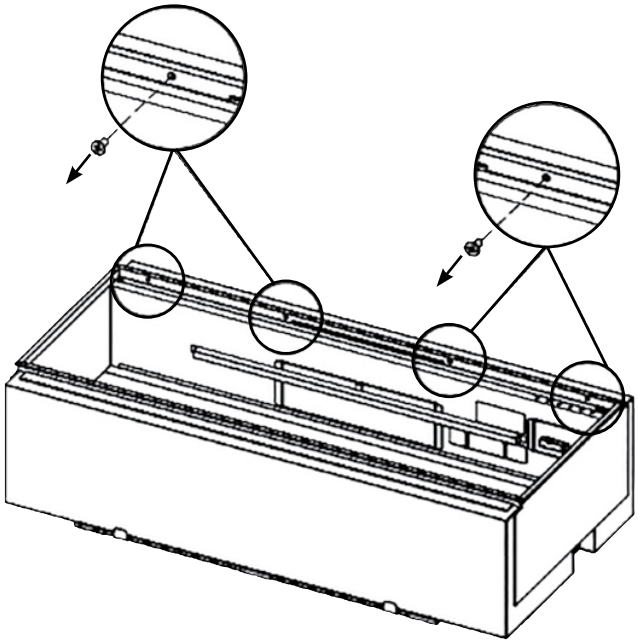

2

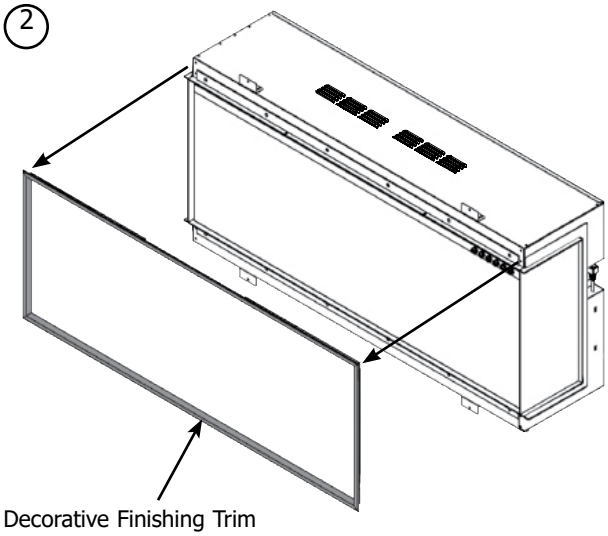

FRONT VIEWING FACE (SINGLE SIDED)

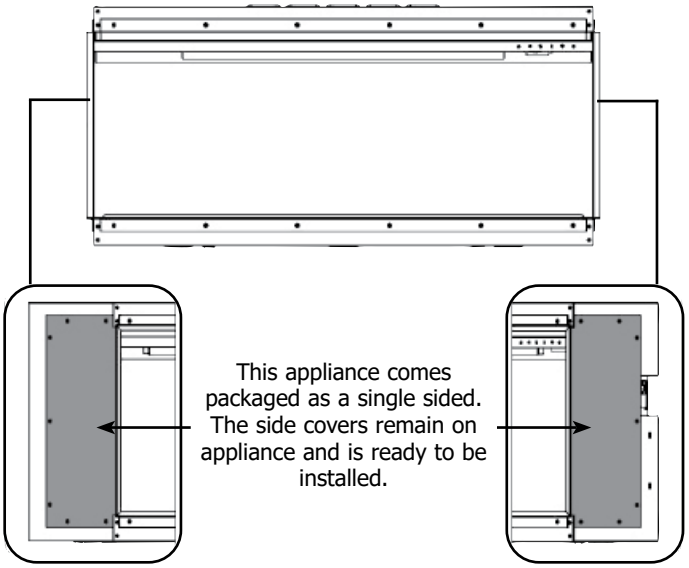

RIGHT VIEWING FACE (RIGHT CORNER CONVERSION)

1 Remove Phillips heads screws and recycle metal side cover. Do not discard screws.

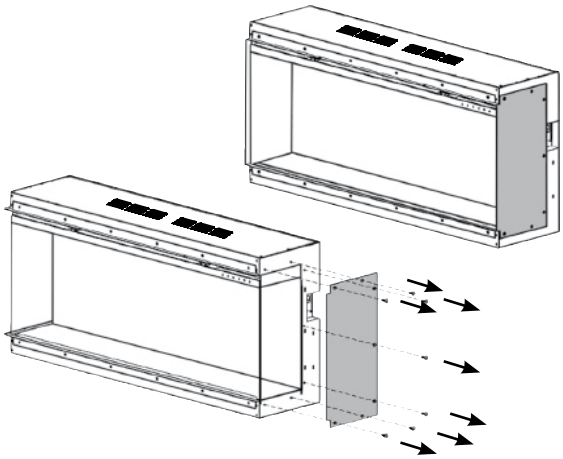

2 Secure the top/bottom trim using the sames screws removed in step 2. Do not tighten. Secure back trim using same screws removed in step 2.
Ensure that the trims are all flush to each other prior to tightening all 7 screws.

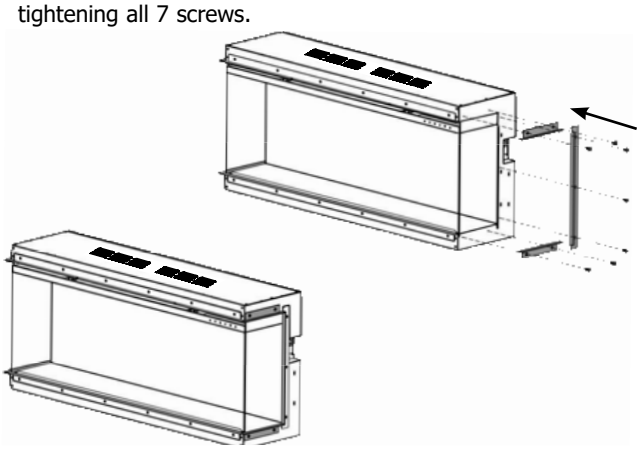

LEFT VIEWING FACE (LEFT CORNER CONVERSION)

1. Remove Phillips heads screws and recycle metal side cover. Do not discard screws.

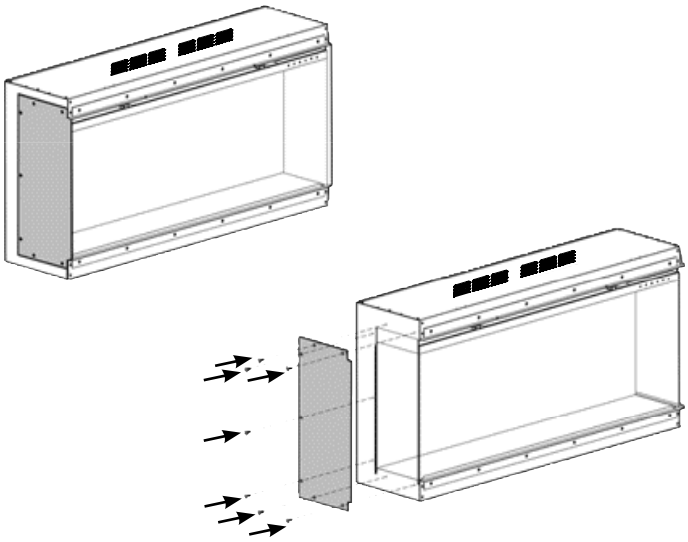

2. Secure the top/bottom trim using the sames screws removed in step 2. Do not tighten. Secure back trim using same screws removed in step 2. Ensure that the trims are all flush to each other prior to tightening all 7 screws.

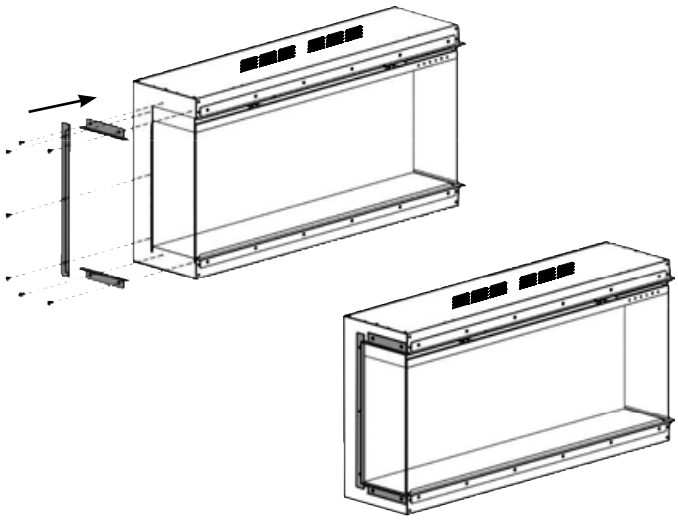

INSTALLATION

MOUNTING BRACKET

1 The wall mounting bracket will be located at the rear of the appliance and is held in place by 2 brackets at base of appliance.
Tilt appliance forward to gain access to the 2 brackets.
Remove 2 screws at base of appliance securing the bracket and discard brackets. Reinstall screws.
Lift up and out to remove wall mounting bracket from rear of appliance.

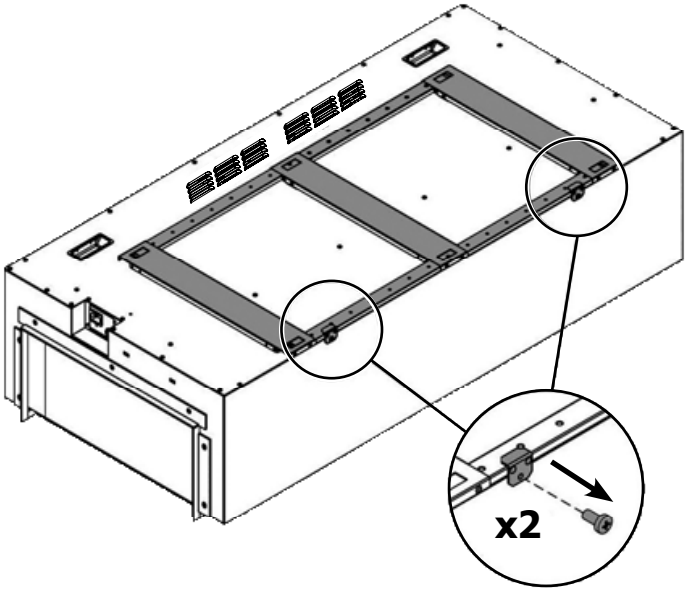

2

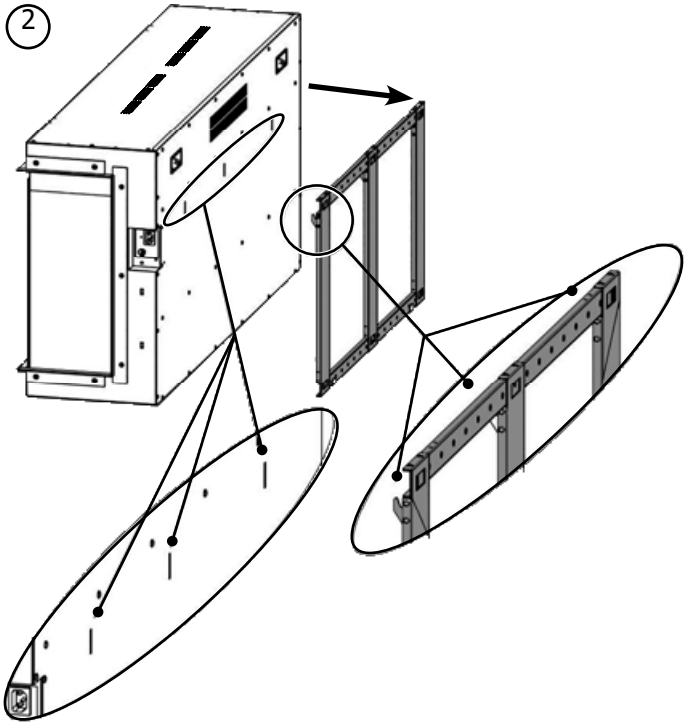

INSTALLATION METHOD 1

1 Mark the wall to the desired height using the wall mounting bracket as a guide. Ensure that at least 2-3 studs are found to support the wall mounting bracket as the weights of these units will vary. Also ensure wall mounting bracket is level.
Note: There is also wall plugs/screws supplied if required.

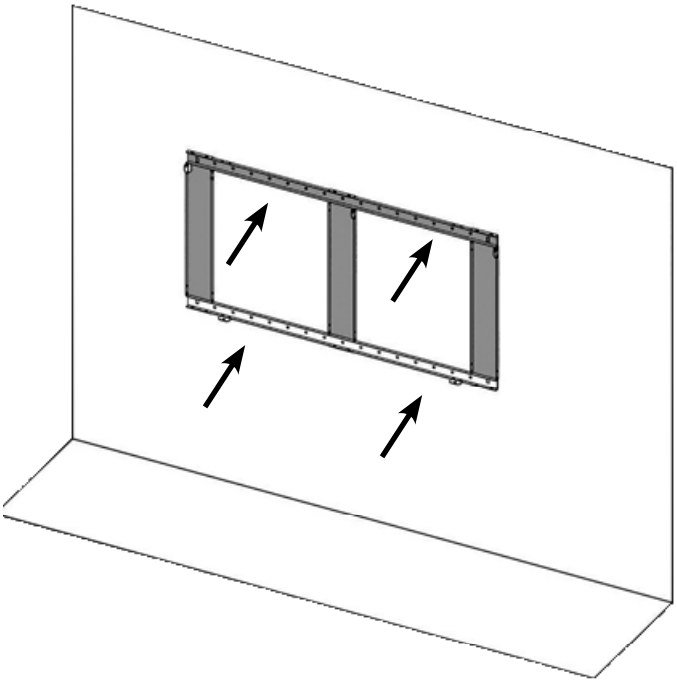

2

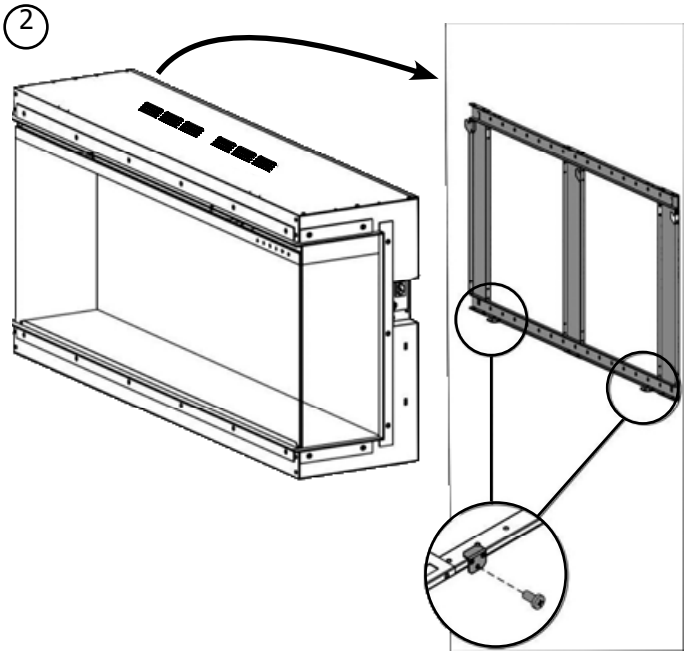

NAILING FLANGES

EXA120 x4
EXA160 x6
EXA190 x6

1 Install nailing flanges as per diagram below. Phillips head screws are provided to attach the nailing flange to appliance. Note: The nailing flanges are adjustable. Determine overall depth of finishing material and adjust to desired depth. Maximum thickness is 13 mm (0.51") when using the supplied decorative finishing trim. See below.

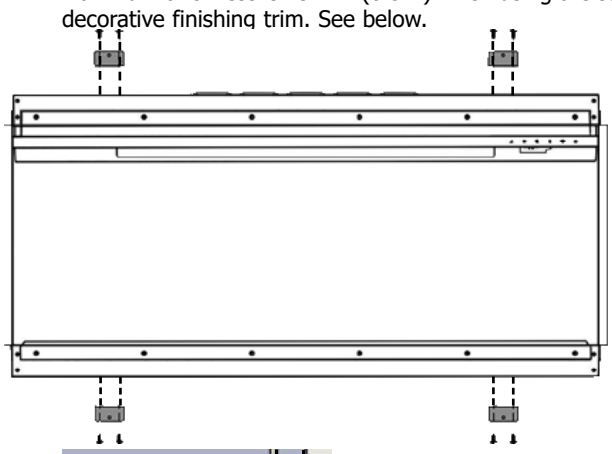

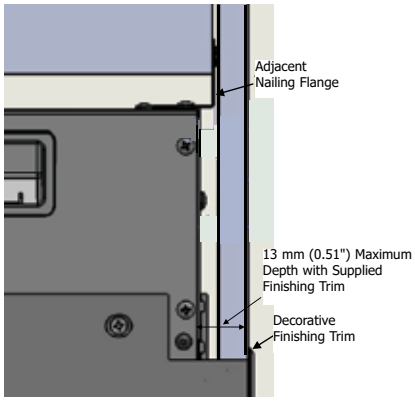

2 Slide unit into position.

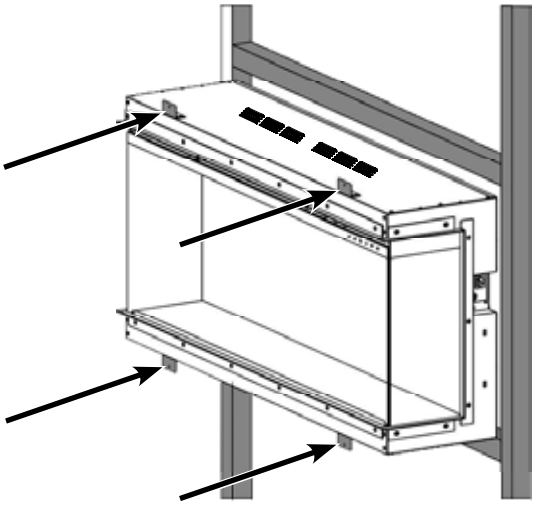

3 Secure appliance to framing as shown below with supplied black wood screws.

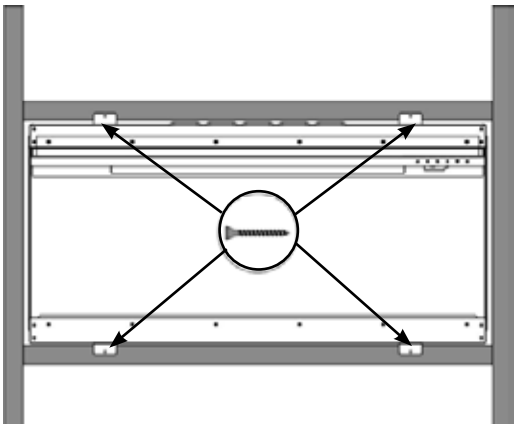

FRONT VIEWING FACE INSTALLATION (SINGLE SIDED)

1

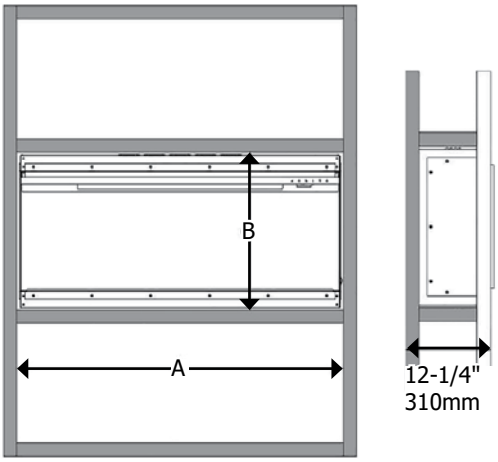

MODELS	A	B
EXA120	47-11/16" 1211 mm	23-1/4" 590 mm
EXA160	63-7/16" 1611 mm	23-1/4" 590 mm
EXA190	75-1/4" 1911 mm	23-1/4" 590 mm

2 Completed Install.

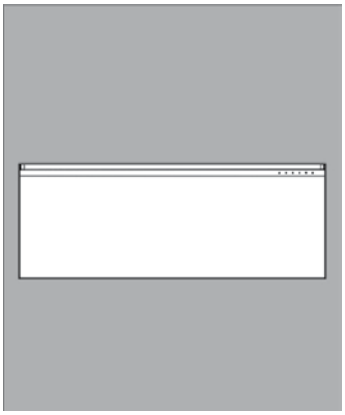

PAINTING
If desired finishing includes a painted wall, 100% acrylic latex, oil based, or standard acrylic paints may be used.
Follow paint manufacturer's instructions for paint and primer application.

TWO SIDED VIEW INSTALLATION (RIGHT/LEFT CORNER)

1 **Note:** Ensure that The nailing flanges are adjusted based on the overall depth of finishing material being used as shown in the nailing flange section of this manual. Maximum finishing material thickness is 13 mm (0.51").
The appliance is designed to be used with standard wall sheathing materials such as drywall, plywood, wood composites, or noncombustible materials.
Thicker materials may also be used.
Note: The decorative finishing trim is not used when installed as as a two sided view and will need to be recycled.
Facing and/or finishing materials must never overhang into the glass opening.
Facing materials may be combustible or non-combustible.
To cover cut/ exposed edges of the combustible facing material or any other finishing materials being used we suggest using J Style Trim or Metal Corner Bead purchased at your local hardware store.
Do not penetrate any screws into the body face.

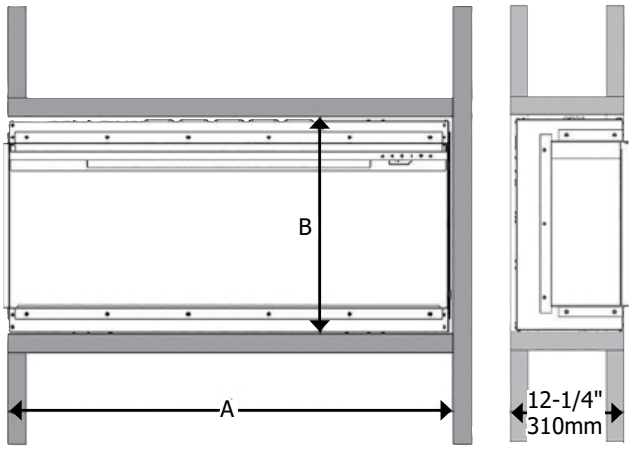

MODELS	A	B
EXA120	47-11/16" 1211 mm	23-1/4" 590 mm
EXA160	63-7/16" 1611 mm	23-1/4" 590 mm
EXA190	75-1/4" 1911 mm	23-1/4" 590 mm

2 Completed Install.

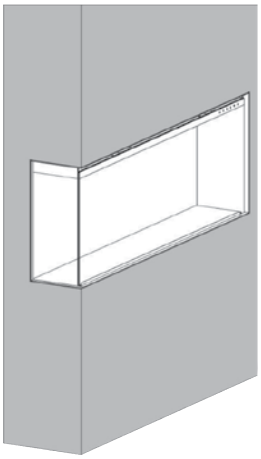

PAINTING
If desired finishing includes a painted wall, 100% acrylic latex, oil based, or standard acrylic paints may be used.
Follow paint manufacturer's instructions for paint and primer application.

THREE SIDED VIEW INSTALLATION

1 **Note:** Ensure that The nailing flanges are adjusted based on the overall depth of finishing material being used as shown in the nailing flange section of this manual. Maximum finishing material thickness is 13 mm (0.51").
The appliance is designed to be used with standard wall sheathing materials such as drywall, plywood, wood composites, or noncombustible materials.
Thicker materials may also be used.
Note: The decorative finishing trim is not used when installed as as a two sided view and will need to be recycled.
Facing and/or finishing materials must never overhang into the glass opening.
Facing materials may be combustible or non-combustible.
To cover cut/ exposed edges of the combustible facing material or any other finishing materials being used we suggest using J Style Trim or Metal Corner Bead purchased at your local hardware store.
Do not penetrate any screws into the body face.

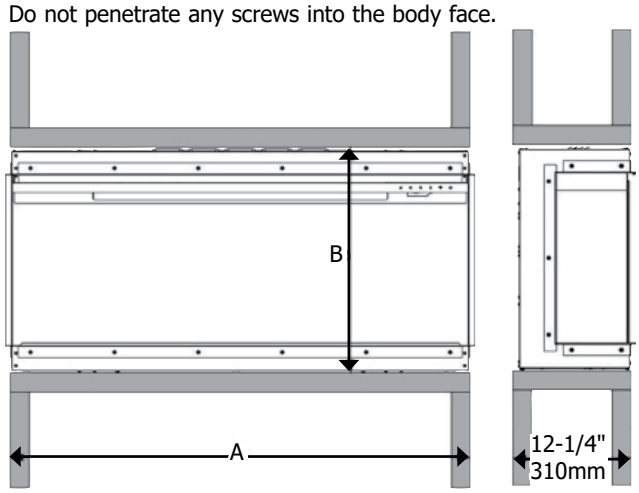

MODELS	A	B
EXA120	47-3/8" 1203 mm	23-1/4" 590 mm
EXA160	63-1/8" 1603 mm	23-1/4" 590 mm
EXA190	74-7/8" 1901 mm	23-1/4" 590 mm

2 Completed Install.

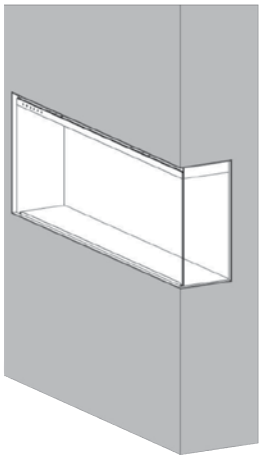

PAINTING
If desired finishing includes a painted wall, 100% acrylic latex, oil based, or standard acrylic paints may be used.
Follow paint manufacturer's instructions for paint and primer application.

ALL METHODS

1

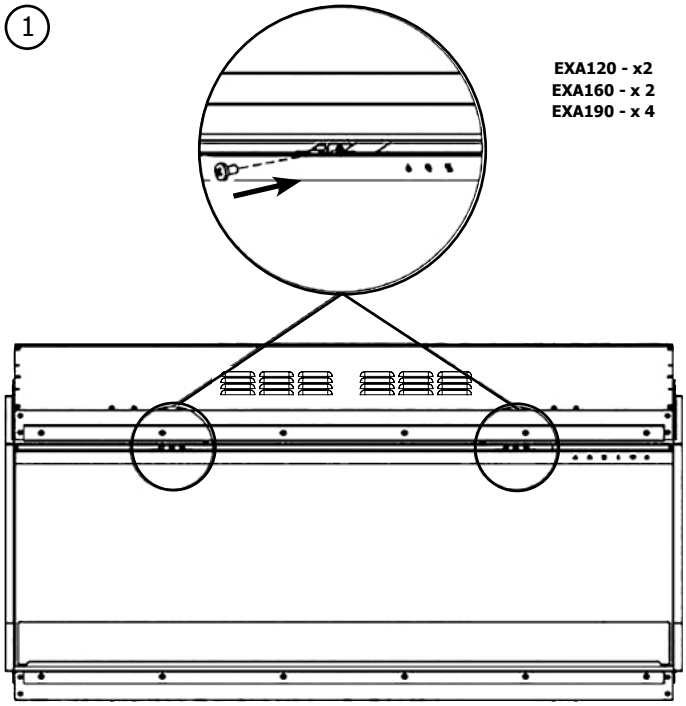

2

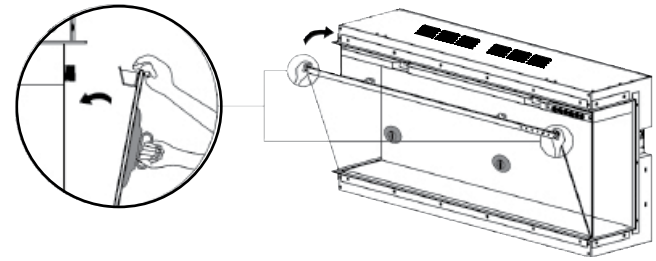

3

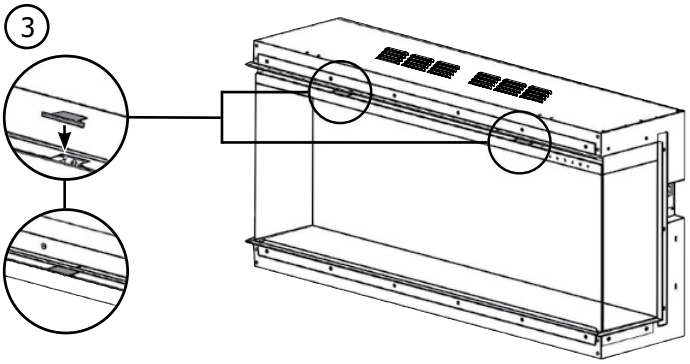

PLUGGING POWER CORD TO APPLIANCE

The appliance is supplied with a 3 prong plug with a 72" lead which is included with the manual package, it will need to be modified for hard wiring.
Note: Must be plugged into a 3 prong receptacle which is exposed and accessible. Do not under any circumstances, cut the ground on the 3 prong plug.
This appliance is for use on 120 Volts only when using a 3-prong plug. The cord has a plug as show in (A). An adapter as shown in (C) is available for connecting three-blade grounding type plugs to two slot receptacles. The green grounding lug extending from the adapter must be connected to a permanent ground such as a properly grounded outlet box. The adapter should not be used if a three-slot grounded receptacle is not available.

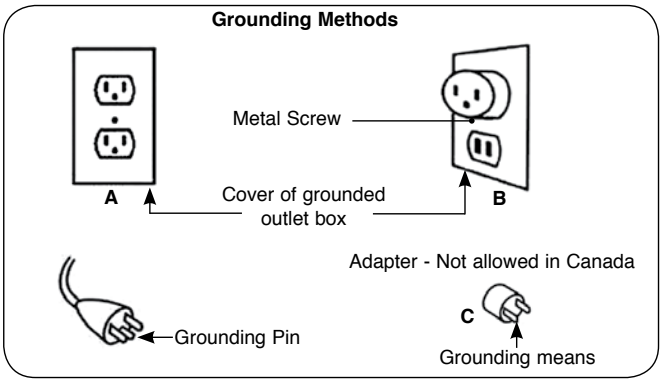

To disconnect the appliance, turn the controls to off, then remove plug from outlet.
This appliance must be connected and grounded in accordance with local codes, if hard wired. In the absence of local codes, use the current CSA C22.1 CANADIAN ELECTRICAL CODE in Canada or the current ANSI/NFPA 70 NATIONAL ELECTRICAL CODE in the United State.
If appliance is to be hardwired, see this manual for details.
IMPORTANT: A 15 amp, 60Hz 120 Volt circuit is required for installation of this Appliance. A dedicated circuit is not required, but is highly recommended to prevent circuit breaker from tripping or fuse failure. Failure to provide adequate power to this Appliance will void your warranty.

OPTIONAL LED MOOD LIGHTING (PART CODE 923-835)

The appliance can be enhanced by an optional LED Mood Lighting Strip. This comes with 10' (3 m) of LED mood lighting and can be operated using the remote control provided with this appliance. A second LED mood kit strip may be obtained if more than 10' (3m) is required. This can be connected to the end of the first LED lighting strip or by using the splitter that is provided with the kit. A maximum of 3 kits is permitted.

Contents

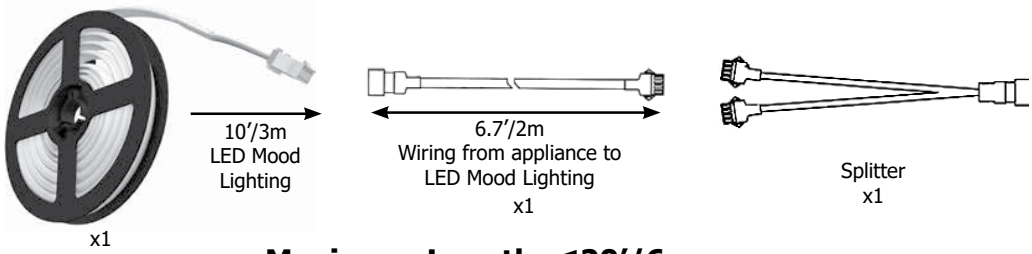

Installation

1 Locate pigtail on right hand side of appliance. Connect other end of LED mood lighting kit to the pigtail as shown below.

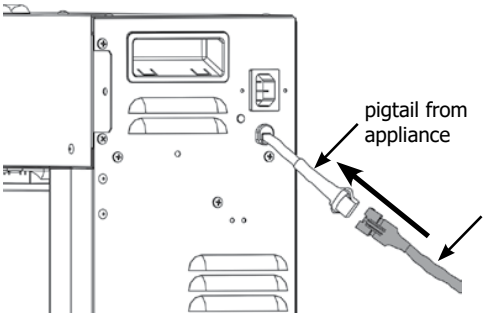

2 Cut LED strip to desired length. Ensure cut line is as per below.

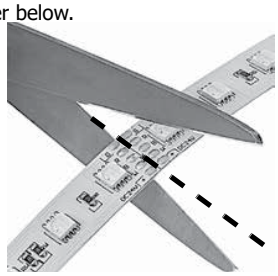

3 Peel adhesive from back side of LED strip.

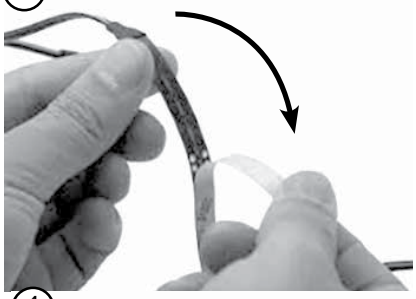

4

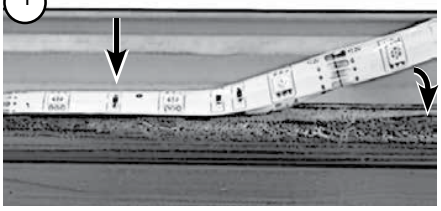

Maximum Length: ≤20′/6m

Option 1 Maximum 20' (6m) with no splitter required.
If more than 10' (3m) is required a second 923-835 LED Mood Lighting Strips would need to be purchased.

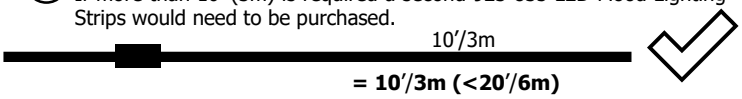

Option 2 Maximum 20' (6m) using supplied splitter
2 x 923-835 LED Mood Lighting Strips required.

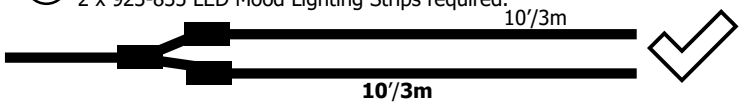

= 20′/6m

Option 3 Maximum 20′(6m) with splitter from the original kit & additional splitter from second LED mood lighting strip kit purchased.
3 x 923-835 LED Mood Lighting Strips required.

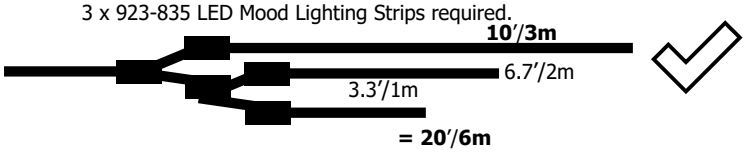

= 20′/6m

4 Not permitted.

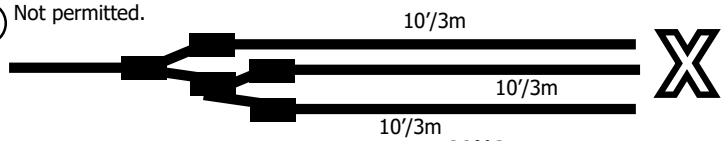

>20′/6m

Example

2 x 923-835 Mood Lighting strip kit & 1 x splitter and 1 x wiring from appliance to LED mood lighting used. See below.

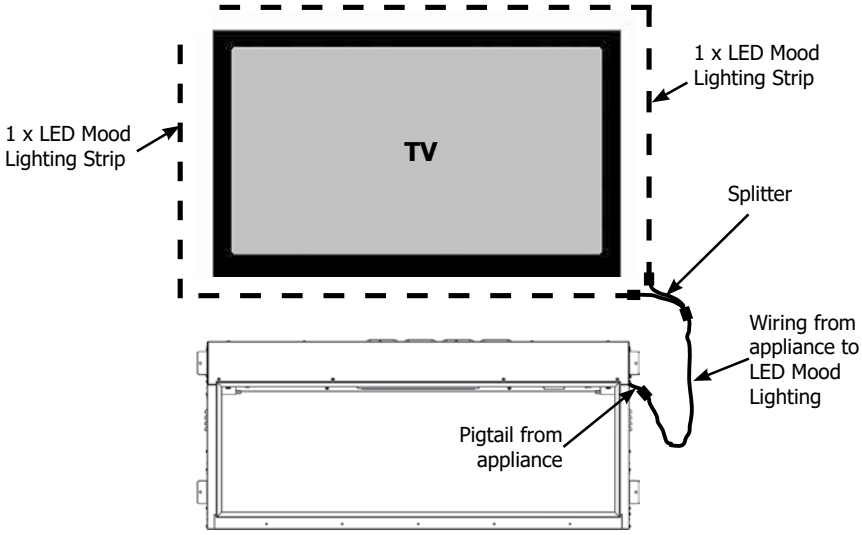

ACCESSING THE FUEL BED

1 Remove the Phillips head screws as shown below.

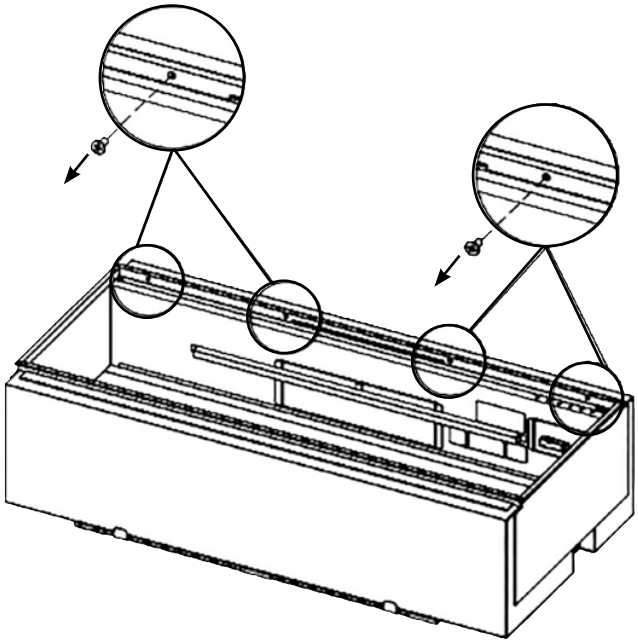

2

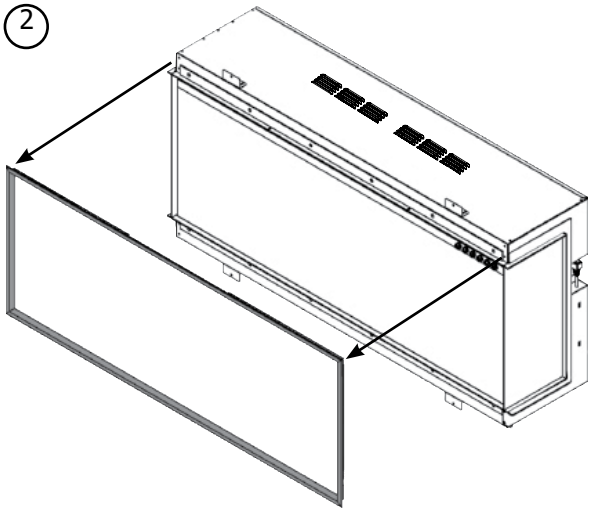

3

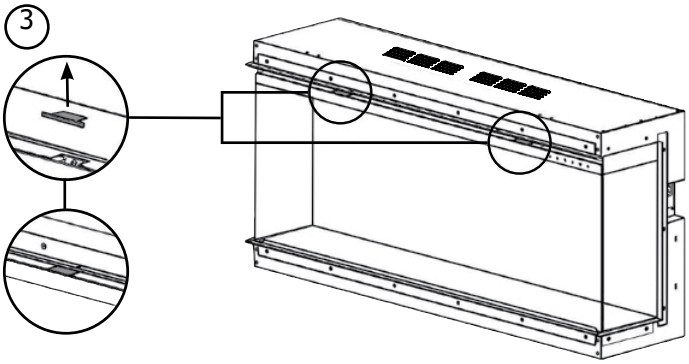

4

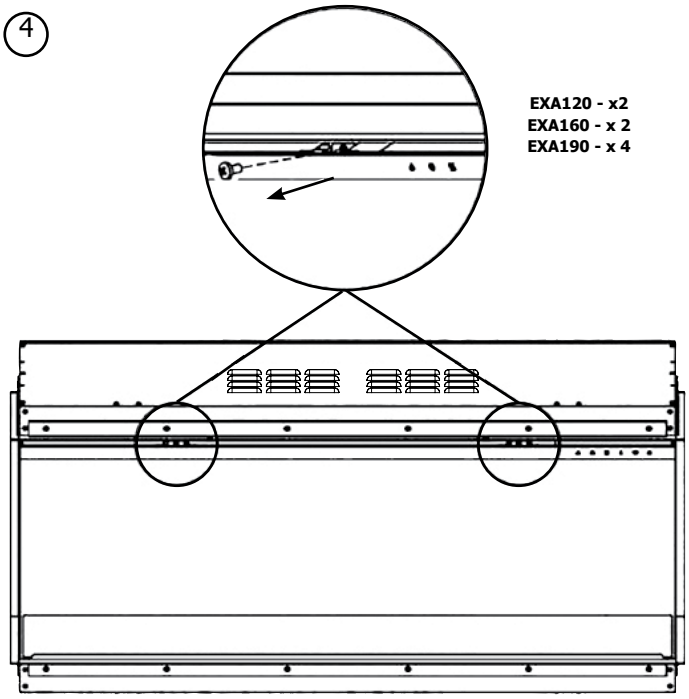

5

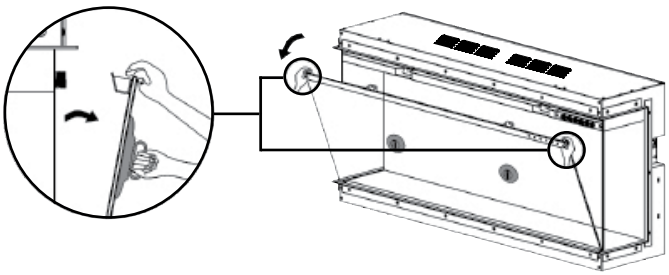

LOG SET - LOG LAYOUT

	EXA120	EXA160	EXA190
AV1	-	1	1
AV2	1	1	1
AV3	1	1	1
AV4	1	1	1
AV5	1	1	2
AV6	1	1	1
AV7	1	1	2
AV8	1	1	2
AV9	1	1	1
AV10	1	1	2
AV11	-	1	-

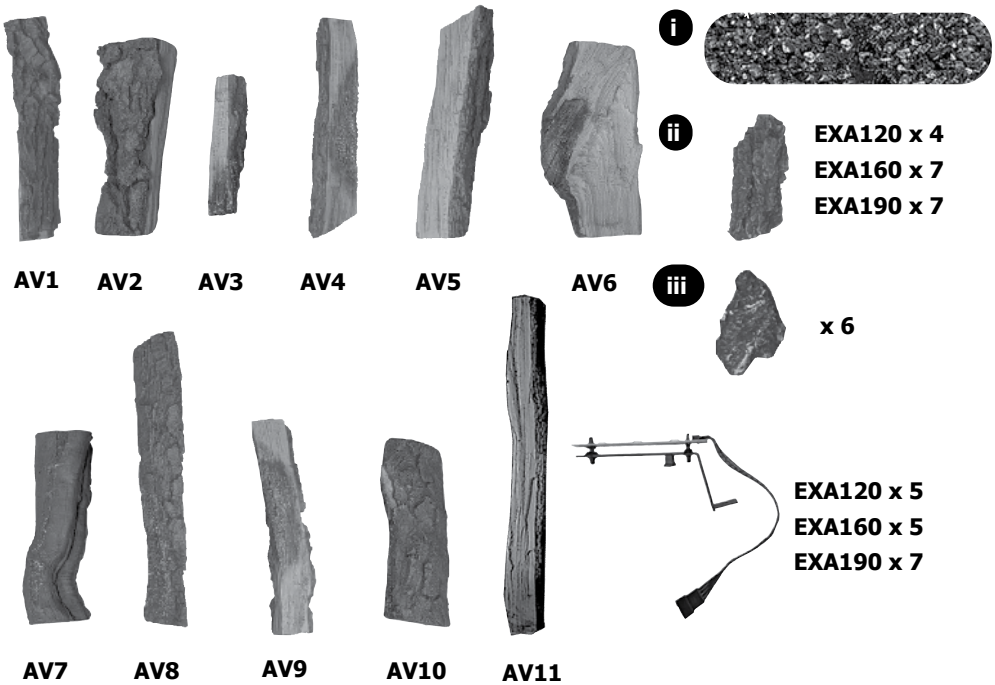

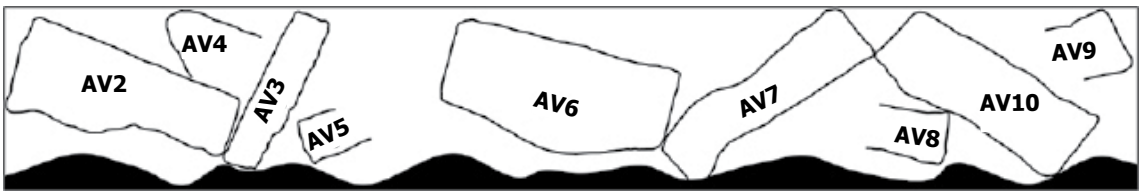

EXA120

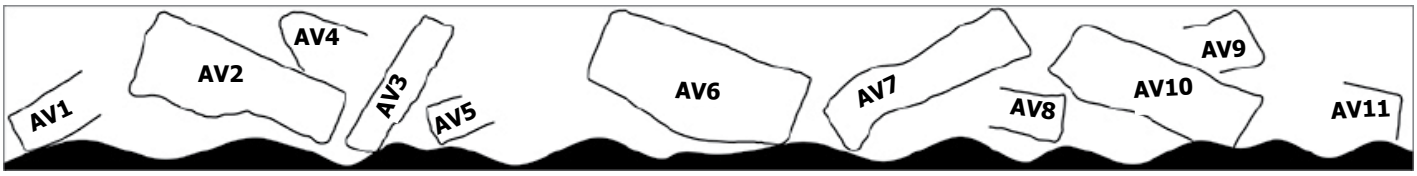

EXA160

EXA190

LOG SET - INSTALLATION

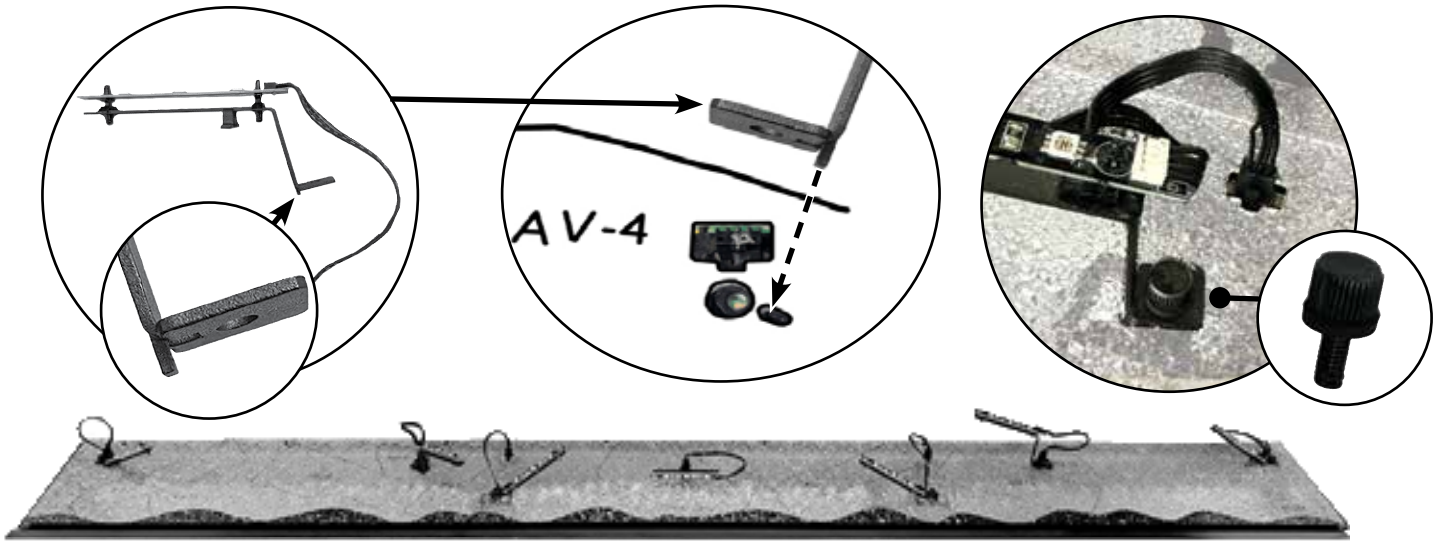

1 **EXA120 - X** **EXA160 - X** **EXA190 - √**

2 **EXA120 - √** **EXA160 - √** **EXA190 - √**

3 **EXA120 - √** **EXA160 - √** **EXA190 - √**

4 **EXA120 - √** **ExA160 - √** **EXA190 - √**

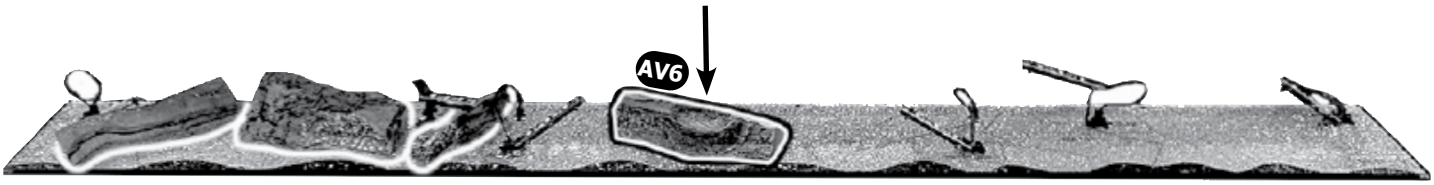

5 **EXA120 - √** **EXA160 - √** **EXA190 - √**

6 **EXA120 - √** **EXA160 - √** **EXA190 - √**

7 **EXA120 - X** **EXA160 - X** **EXA190 - √**

8 **EXA120 - X** **EXA160 - √** **EXA190 - √**

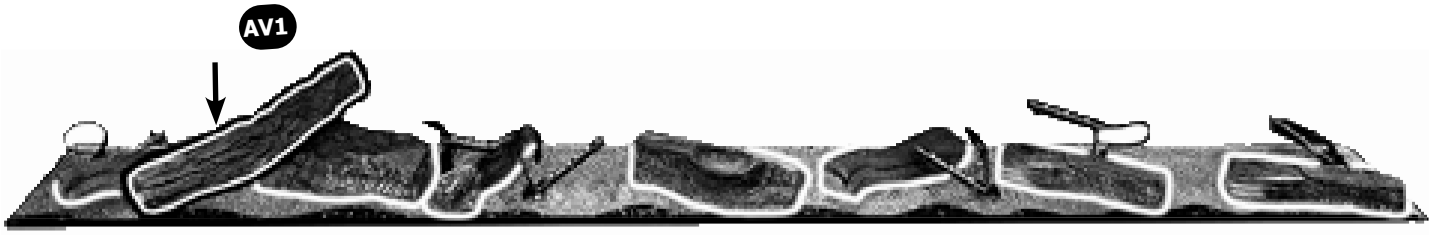

9 **EXA120 - X** **EXA160 - X** **EXA190 - √**

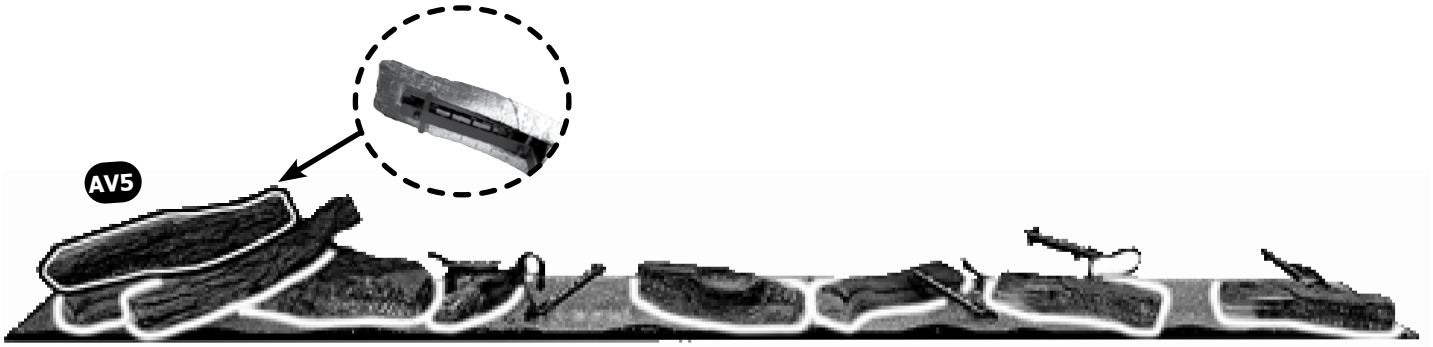

10 **EXA120 - √** **EXA160 - √** **EXA190 - √**

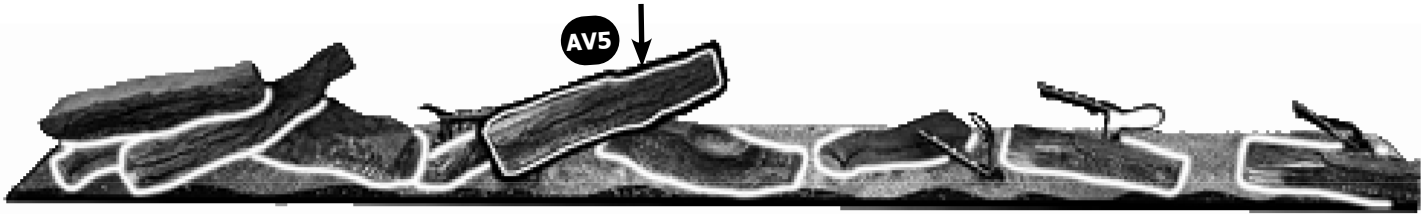

11 **EXA120 - √** **EXA160 - √** **EXA190 - √**

12 **EXA120 - √** **EXA160 - √** **EXA190 - √**

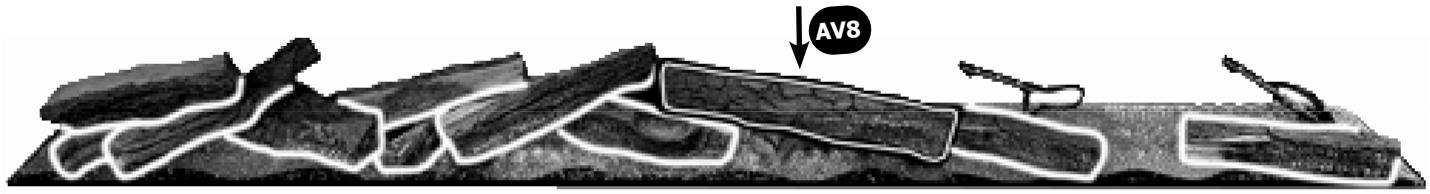

13 **EXA120 - √** **EXA160 - √** **EXA190 - √**

(14) EXA120 - X EXA160 - √ EXA190 - X

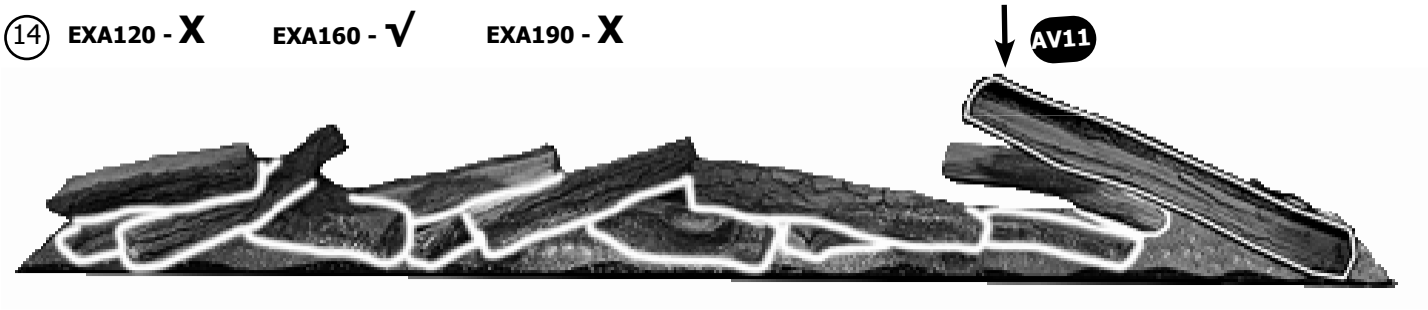

(15) EXA120 - X EXA160 - X EXA190 - √

(16) EXA120 - √ EXA160 - √ EXA190 - √

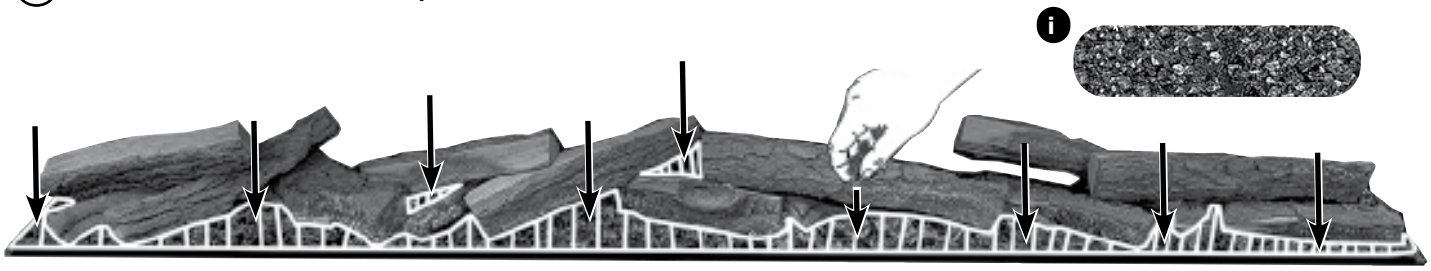

(17) EXA120 - √ EXA160 - √ EXA190 - √

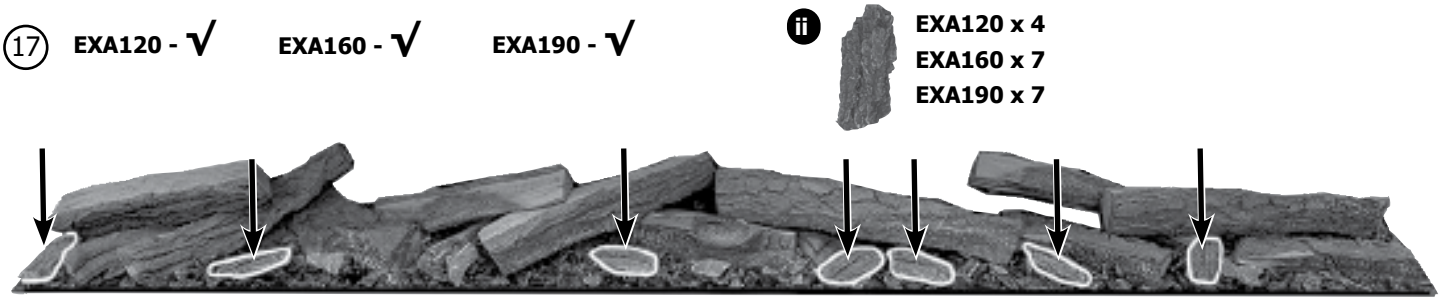

(18) EXA120 √ EXA160 - √ EXA190 - √

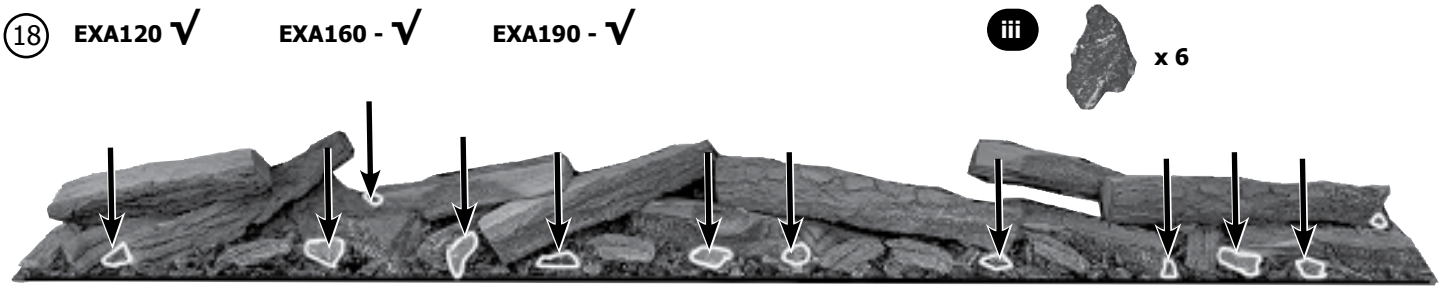

COMPLETED INSTALLATION OF LOG SET

EXA120

EXA160

EXA190

SERVICING INSTRUCTIONS

SERVICING REQUIREMENTS

DURING SERVICING OF THIS APPLIANCE IT MAY BE NECESSARY TO CUT CABLE TIES IN ORDER TO ACCESS AND REMOVE SOME OF THE PARTS. THESE MUST BE REPLACED WHEN REASSEMBLING THE APPLIANCE.

THIS APPLIANCE MUST ONLY BE SERVICED BY A SUITABLY QUALIFIED PERSON.
BEFORE UNDERTAKING ANY WORK ON THE APPLIANCE: SWITCH OFF THE APPLIANCE AND ISOLATE THE POWER SUPPLY ENSURING THERE IS NO POWER TO THE APPLIANCE.

Wait for at least 10 minutes until the appliance has cooled down.

Remote Handset Battery Replacement
Replace with 2 AAA batteries. Make sure the batteries are installed correctly in the remote control.

Note: Only use regular alkaline batteries. Do not use rechargeable or lithium batteries.
Do not mix old and new batteries.
IMPORTANT: Remove batteries if the appliance is not used for long periods.

NOTE: The remote control has a Battery Status indicator (top right corner), after an extended period of displaying empty the LED screen will cease to function despite the handset still being able to send commands.
Replace the batteries to restore display.

Maintenance of Motors
The motor used on the flame effect is pre-lubricated for extended bearing life and requires no further lubrication. However, periodic cleaning/vacuuming of the heater unit is recommended.

Resetting the Thermal Cutout Switch
The appliance is fitted with an Electronic Safety Control (E.S.). This is a safety device which switches off the fire if, the appliance overheats for any reason e.g. when covered.

If the heater stops operating whilst the flame effect continues normally, this indicates that the E.S. Control is in operation.
The E.S. Control can only be re-set after the appliance has cooled down.

To re-set the E.S:
Switch off the appliance (Manual On/Off switch) and leave for approximately 120 minutes.
Remove any obstruction to the fan heater outlet or other internal parts.
Switch on appliance and the E.S. Control will re-set. Ensure that the appliance is functioning correctly. If the E.S. Control operates again, the appliance should be checked by a competent electrician.

PAIRING THE REMOTE CONTROL TO THE APPLIANCE

SIGNAL CODE

The below operations should be carried out before coding when changing to a new remote or the unit cannot be controlled by the remote:

Press the power button until 2 short beeps sound from the unit, release the button.

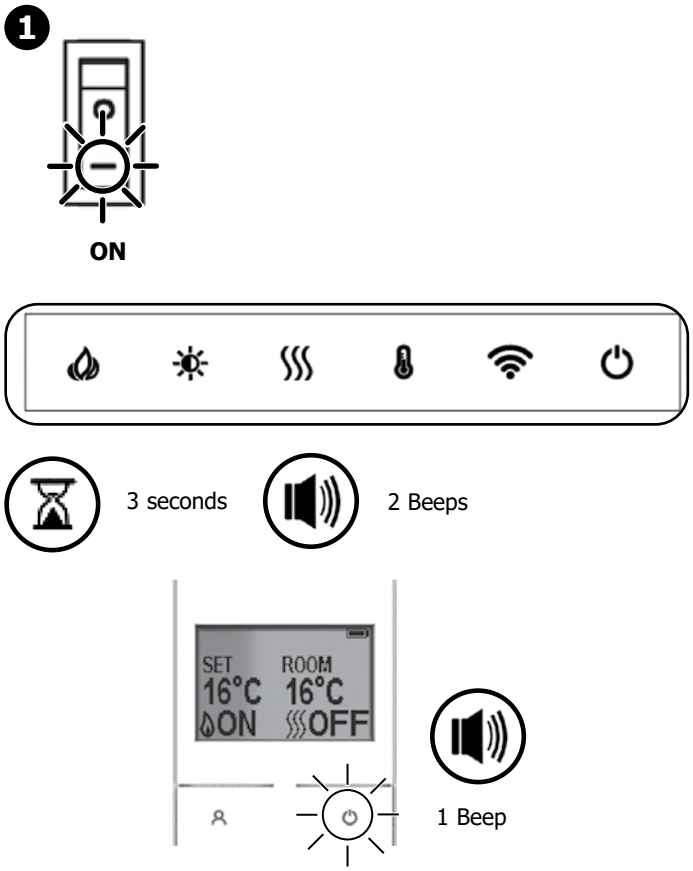

Within 10 seconds, press the button on remote. The coding is finished when 1 long beep sounds from the unit.

Resetting of the remote control is necessary if the appliance operates wrongly due to external interference signal and the remote control is not in use.

Open the back cover of the Remote.

Press the Reset button for 3 seconds and reset the coding.

REMOVING THE FUEL BED - SERVICING THE APPLIANCE

The decorative finishing trim (if installed), glass, media will need to be removed in order to do any maintenance inside of the appliance.
THIS APPLIANCE MUST ONLY BE SERVICED BY A SUITABLY QUALIFIED PERSON.
BEFORE UNDERTAKING ANY WORK ON THE APPLIANCE: SWITCH OFF THE APPLIANCE AND ISOLATE THE POWER SUPPLY ENSURING THERE IS NO POWER TO THE APPLIANCE.
Wait for at least 10 minutes until the appliance has cooled down.

CAUTION: Ensure that the wires do not touch a hot surface and are away from sharp edges.
Label all wires prior to disconnection when servicing controls. Wiring errors can cause improper and dangerous operation.

EXA120 x 5
EXA160 x 5
EXA190 x 7

1

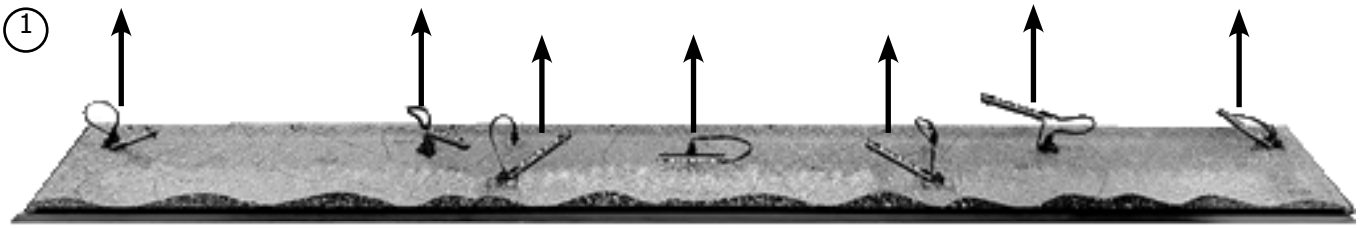

2

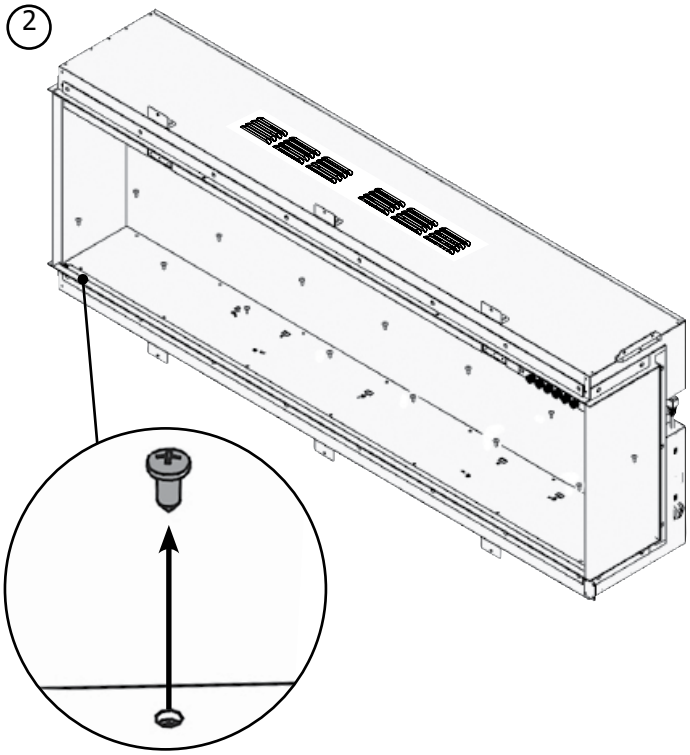

3

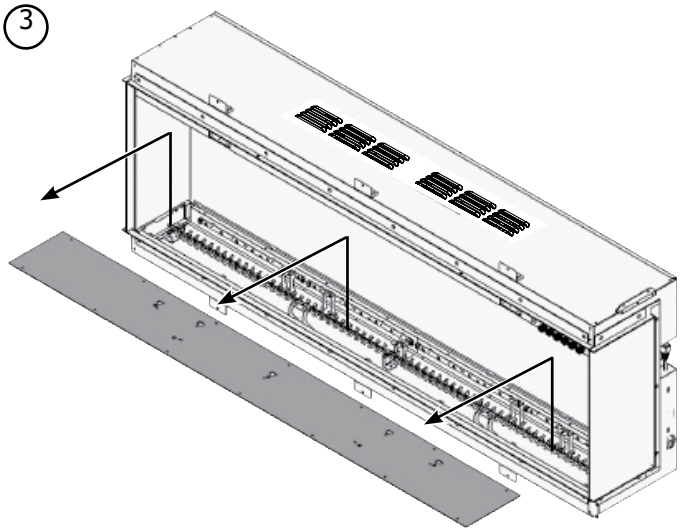

REMOVING THE GLASS SIDE PANELS

1

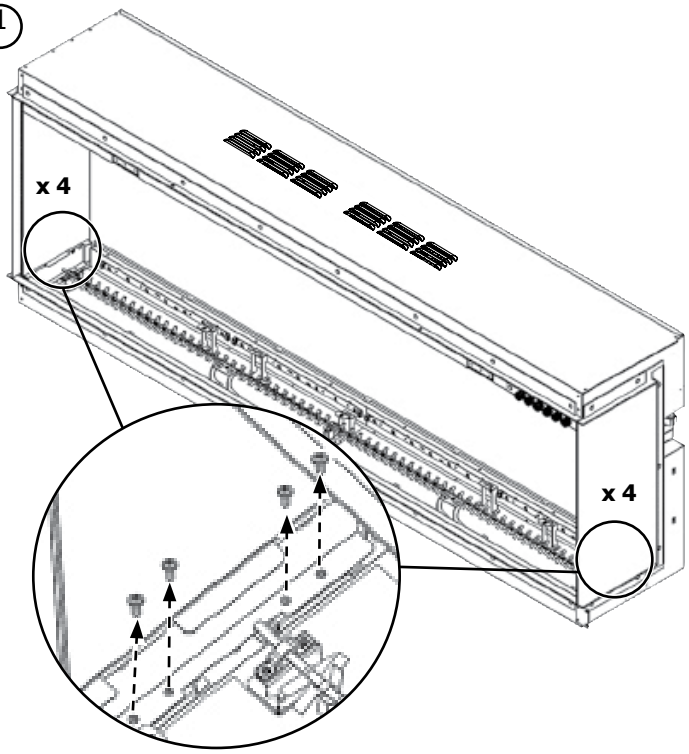

3

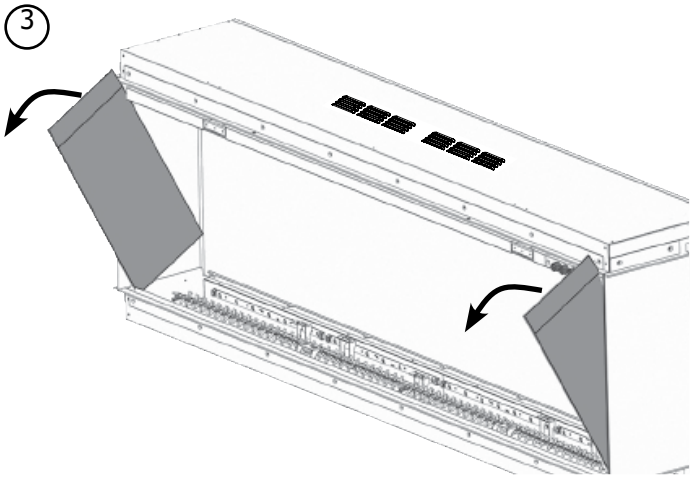

2

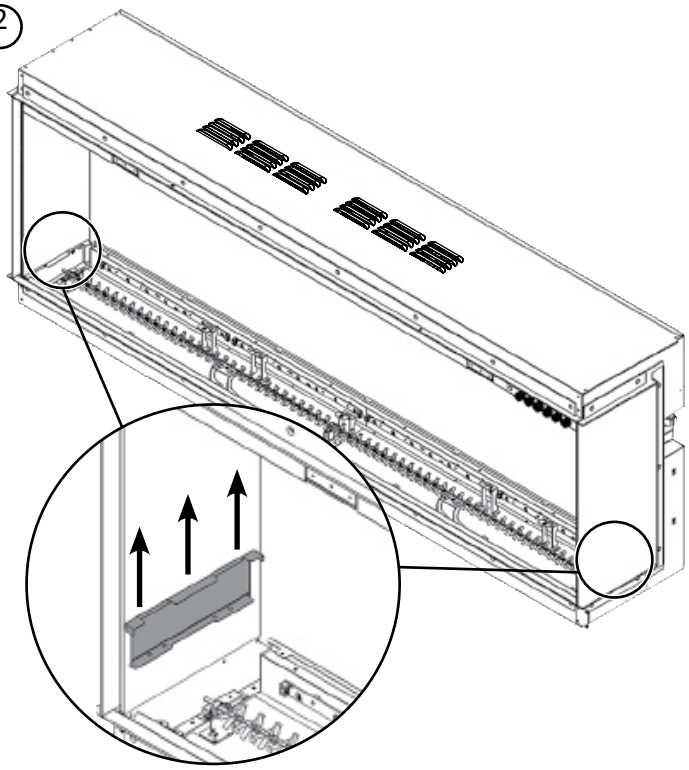

REMOVING THE FUEL BED EFFECT SPINDLE

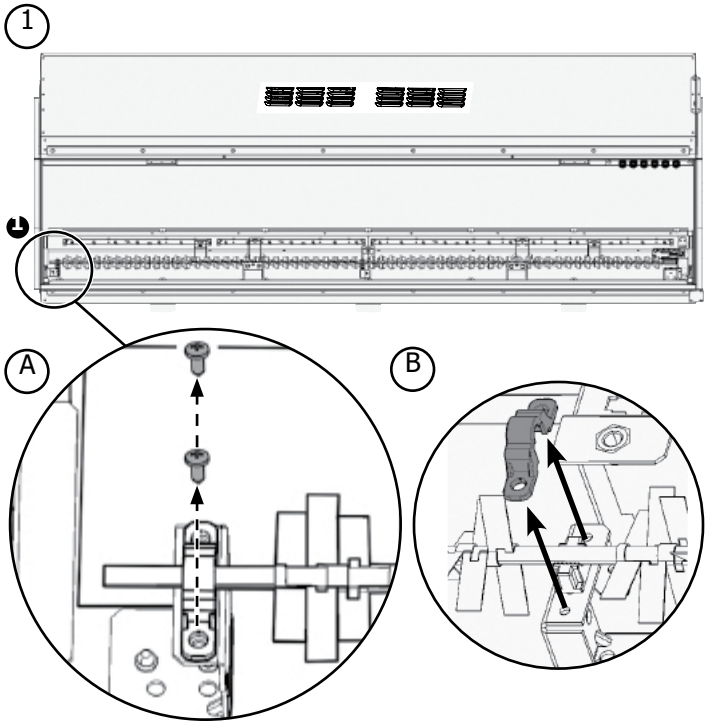

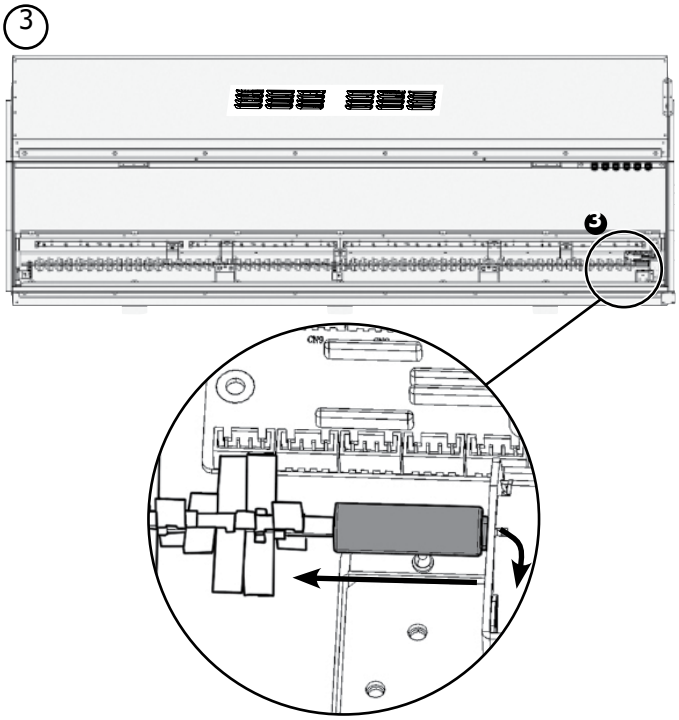

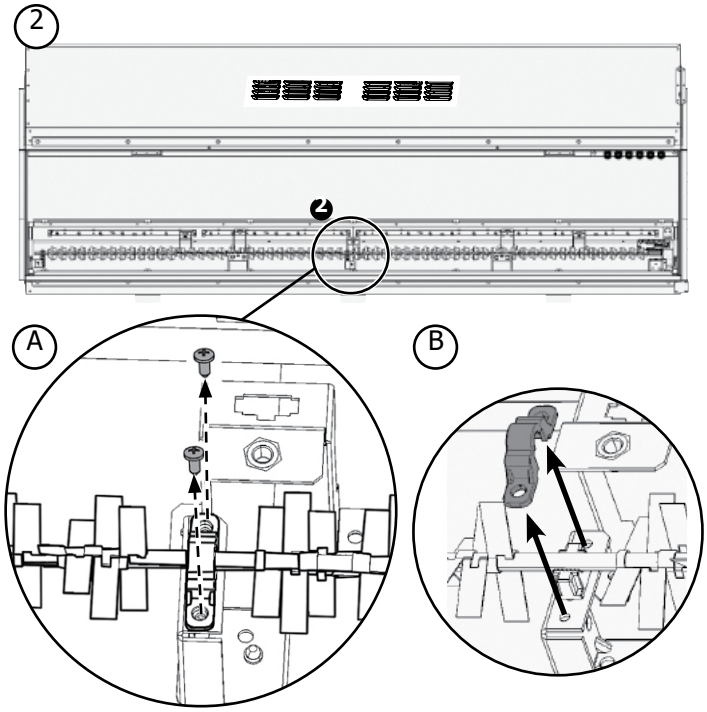

REPLACING THE FUEL BED LEDS

1

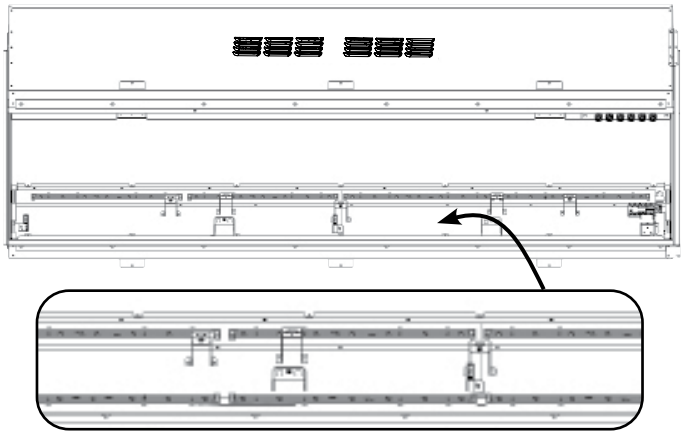

2

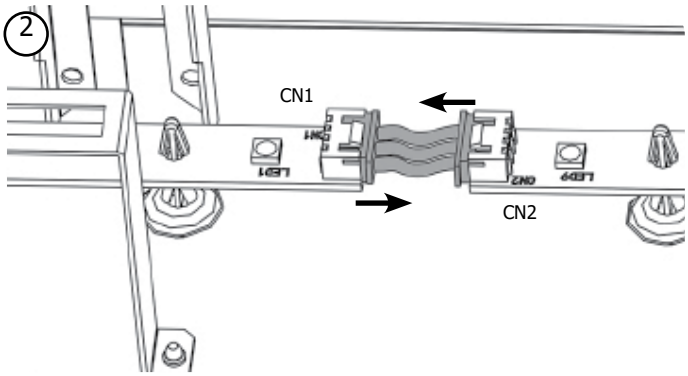

3

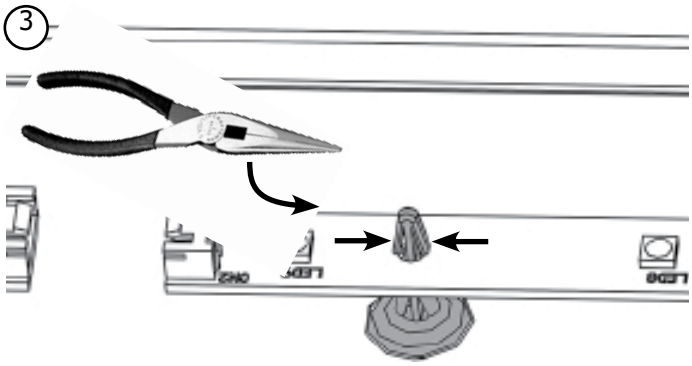

4

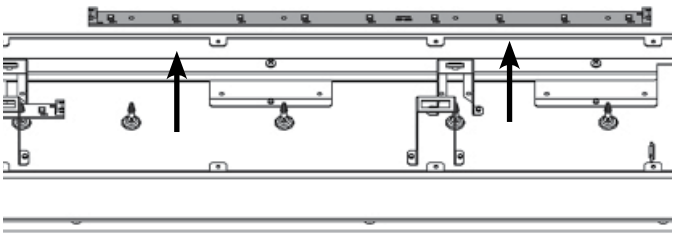

REMOVING THE INNER SCREEN

1

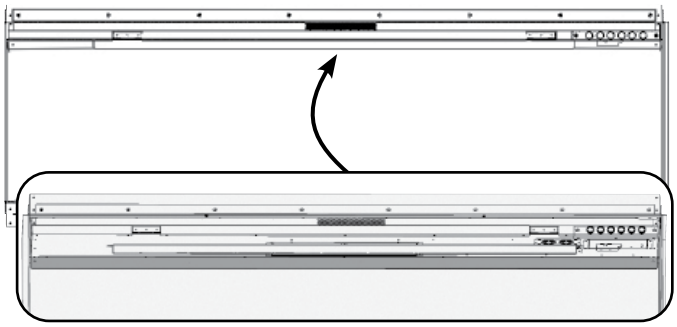

2

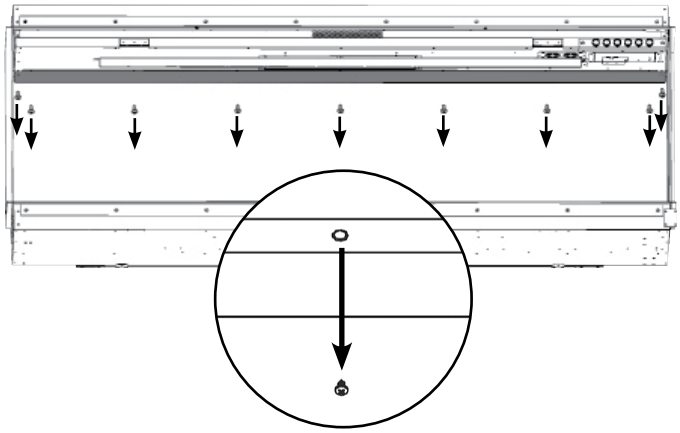

3

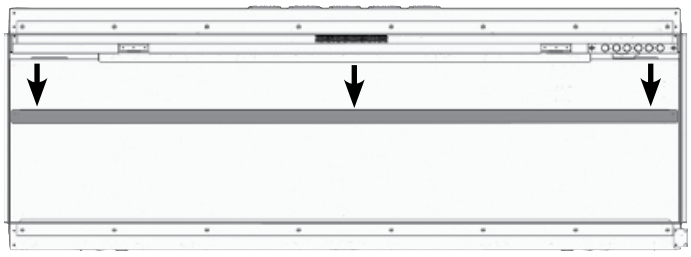

4

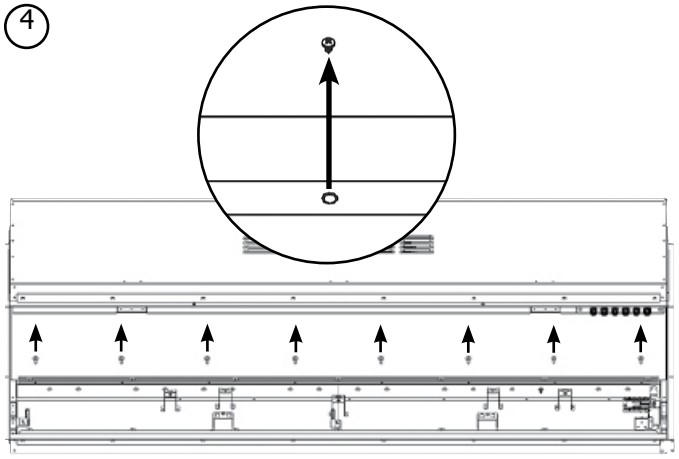

5

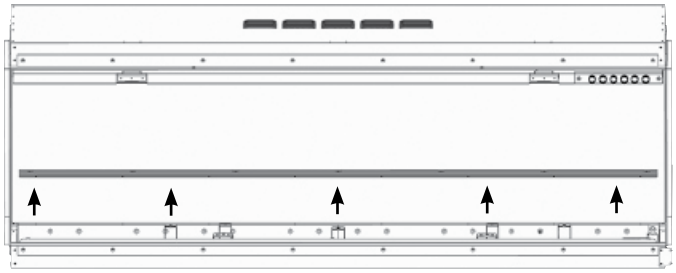

6

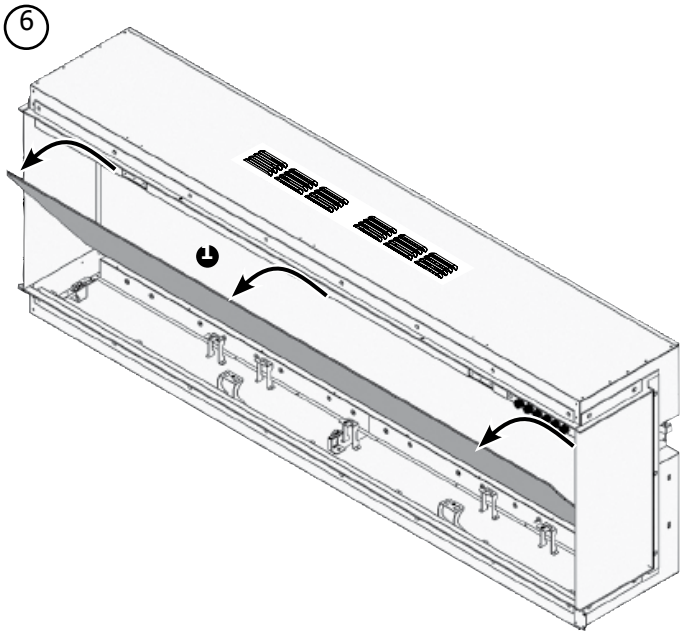

7

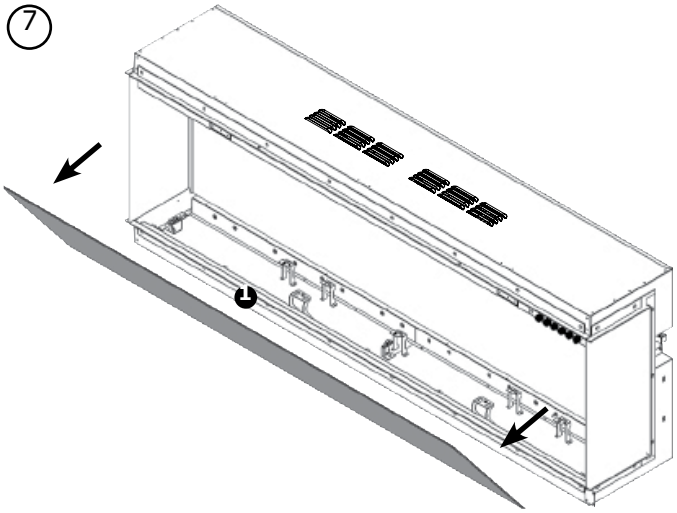

8

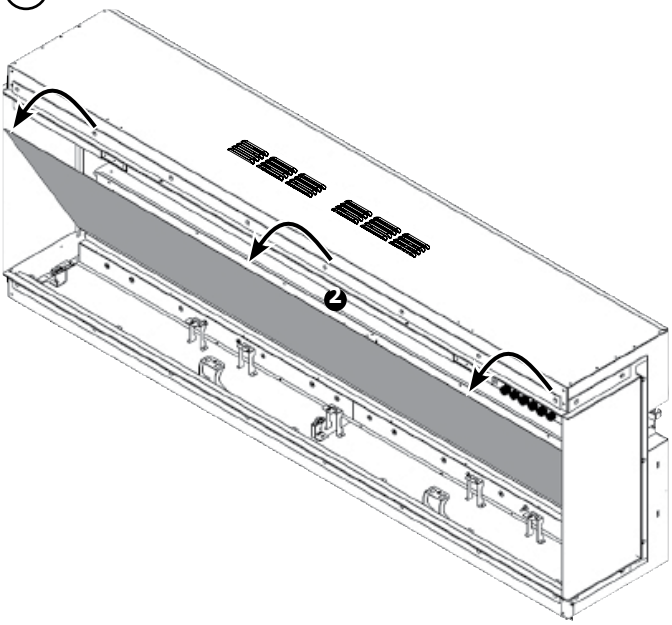

9

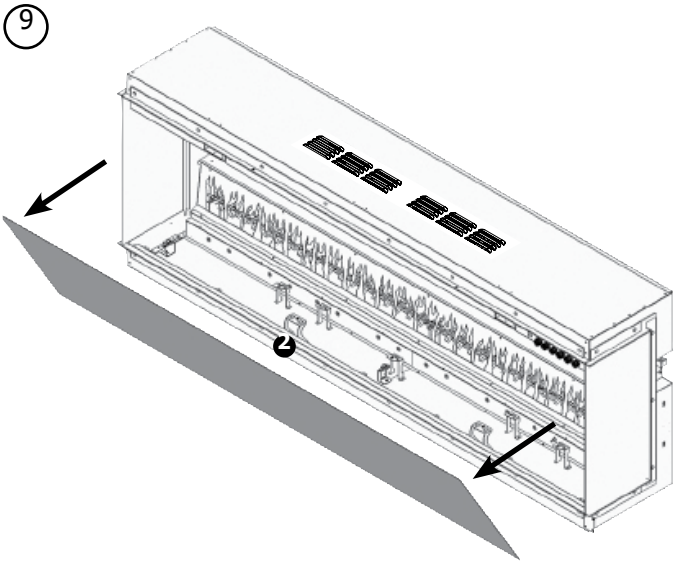

REMOVING THE FLAME EFFECT + LEDS

1

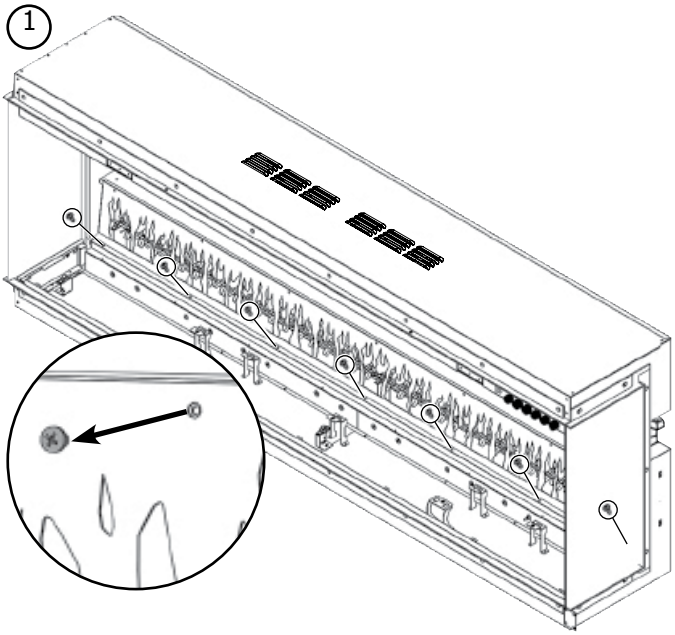

2

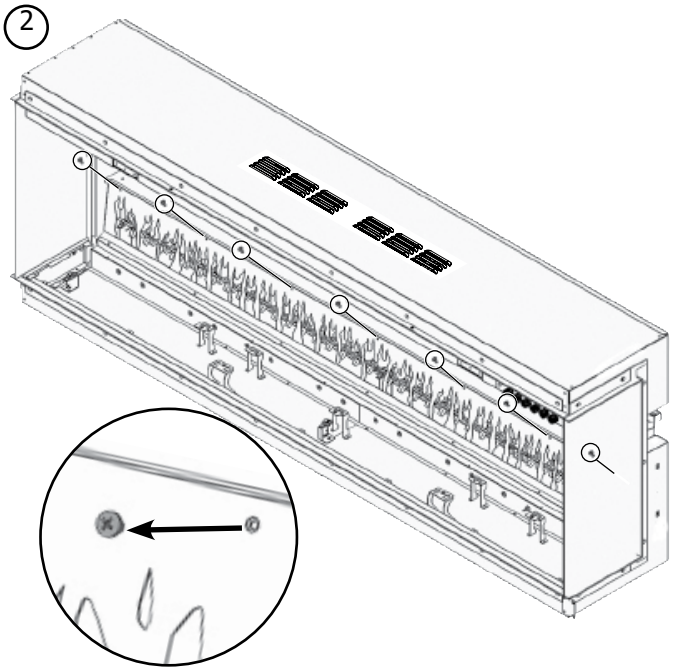

3

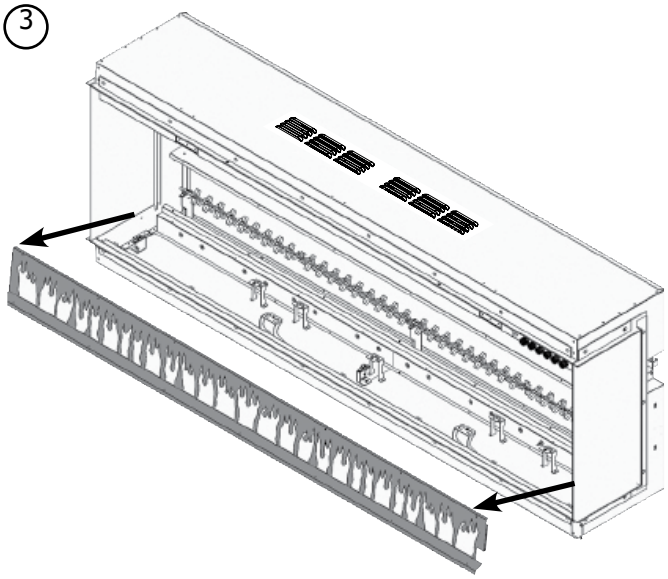

Remove all the wires and connectors. Note the orientation of the connectors.

4

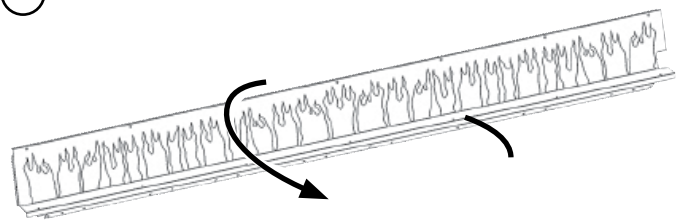

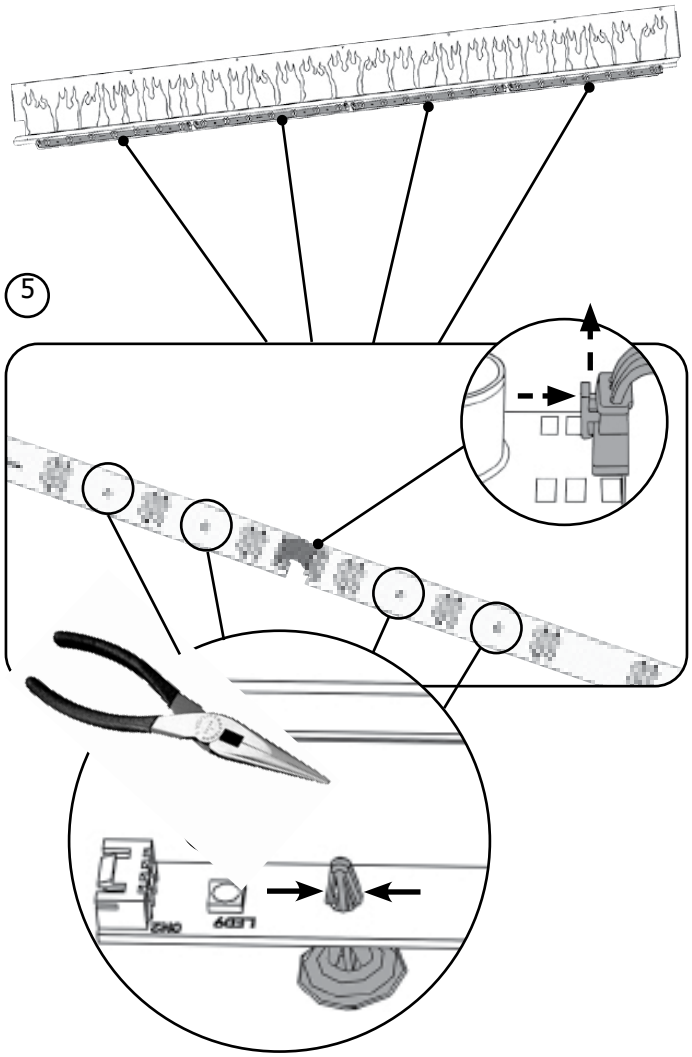
5

REMOVING THE EFFECT SPINDLE

1

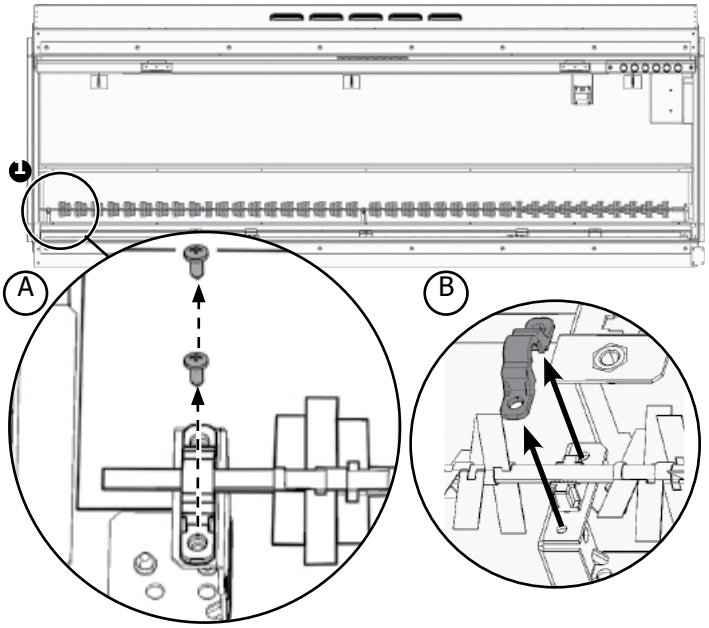

2

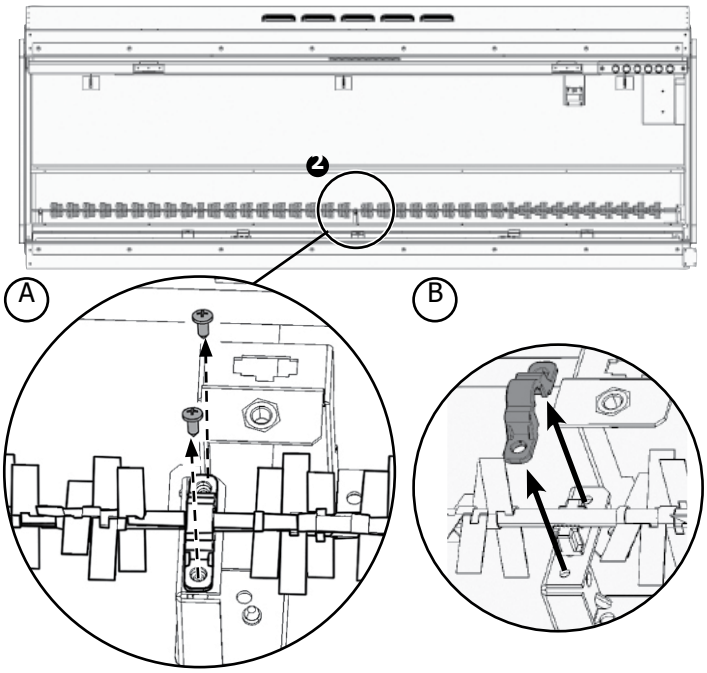

3

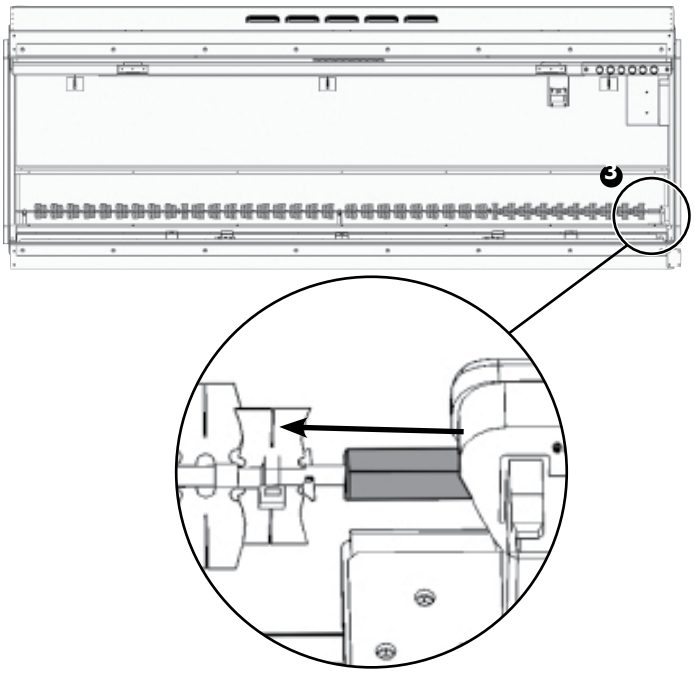

REMOVING THE LED DRIVERS

1

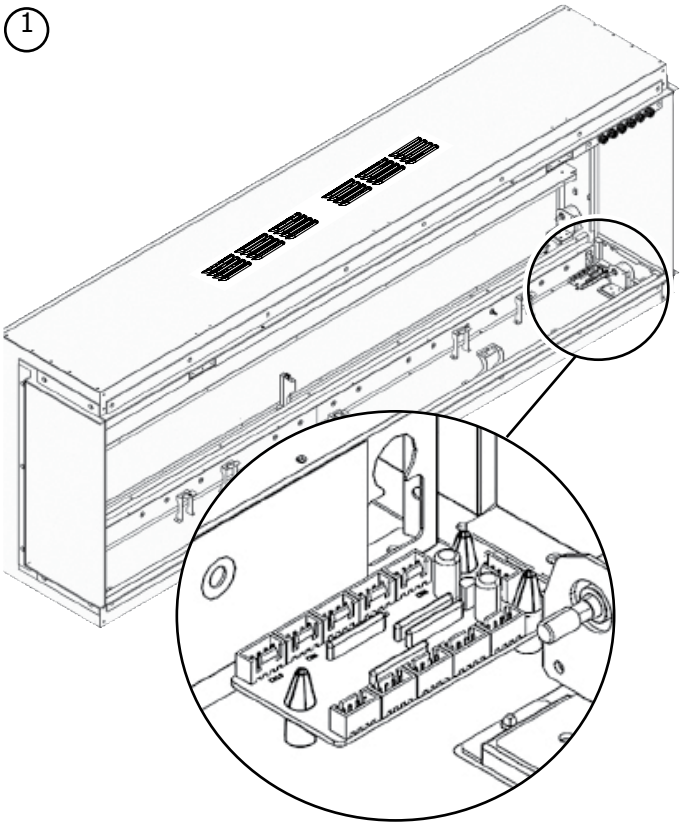

Remove all the wires and connectors. Note the orientation of the connectors.

2

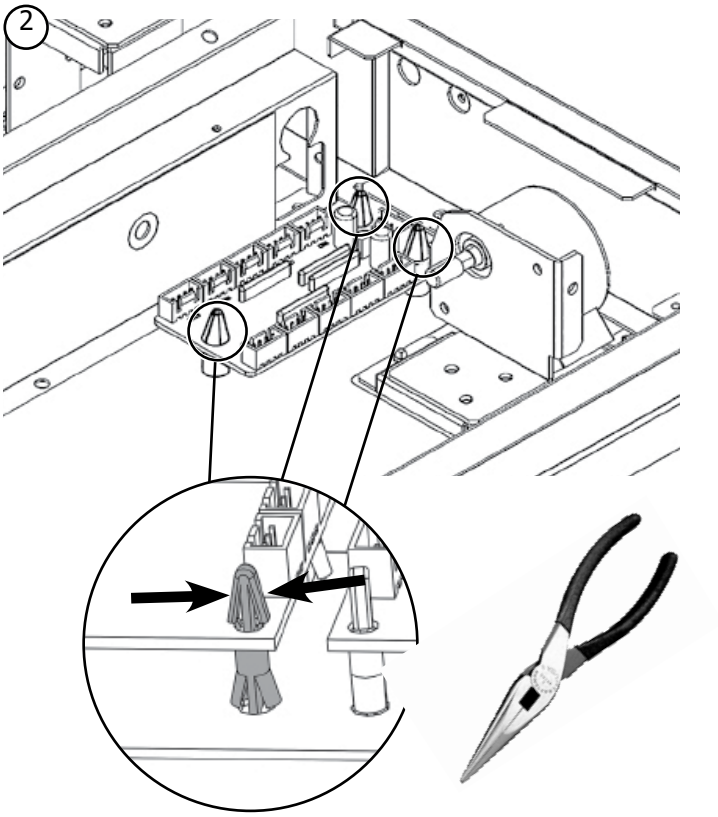

3

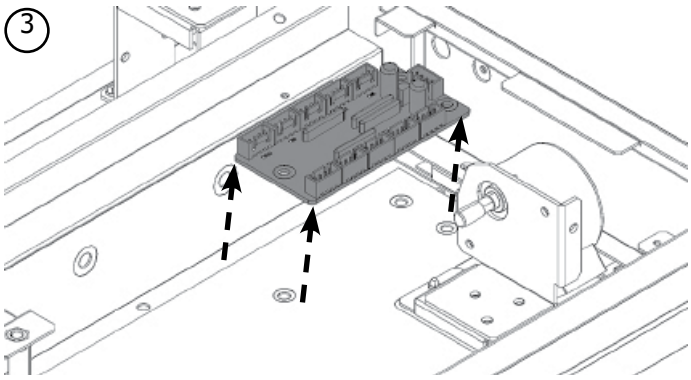

REMOVING THE FUEL BED MOTOR

1

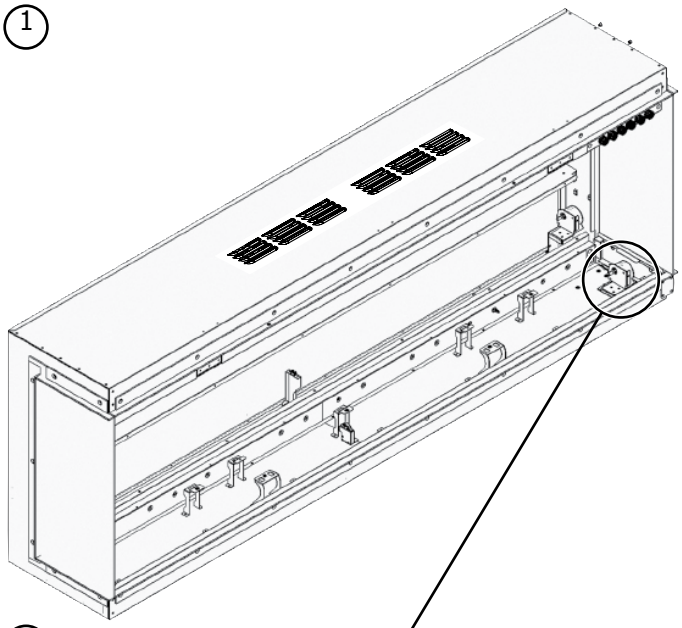

2

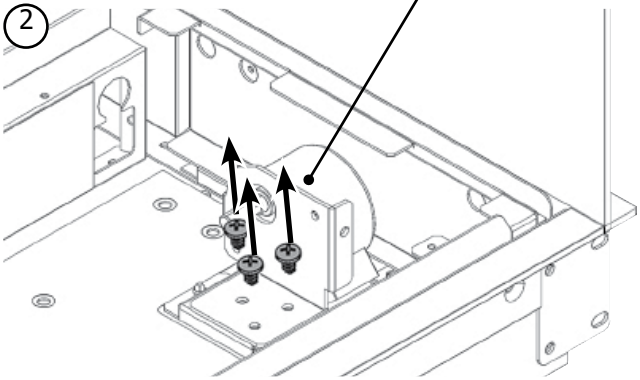

3

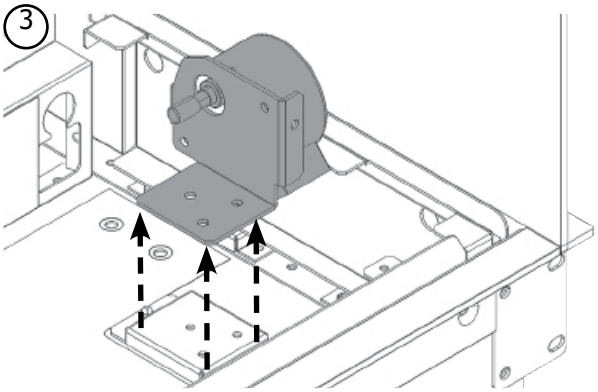

4

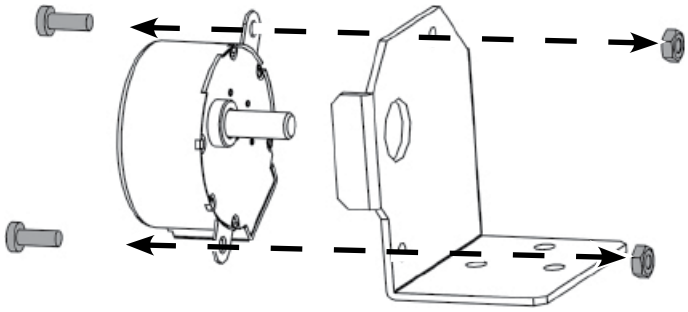

Remove all the wires and connectors. Note the orientation of the connectors.

REMOVING THE FLAME EFFECT MOTOR

1

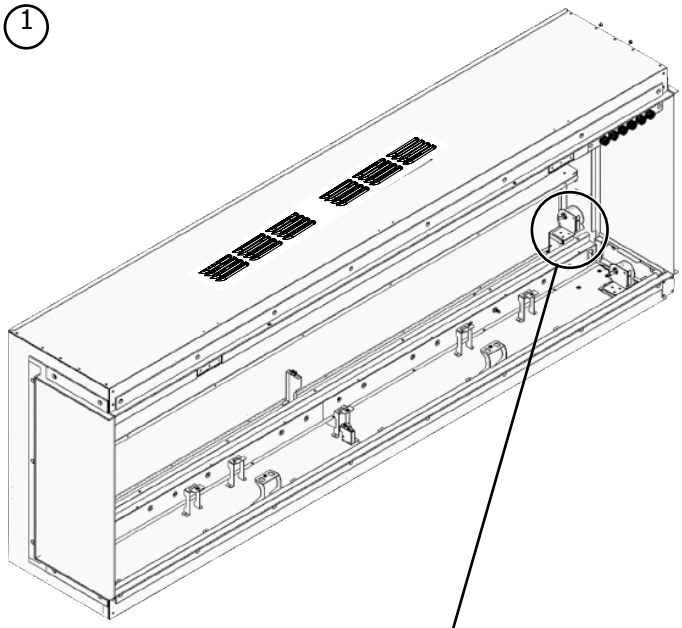

2

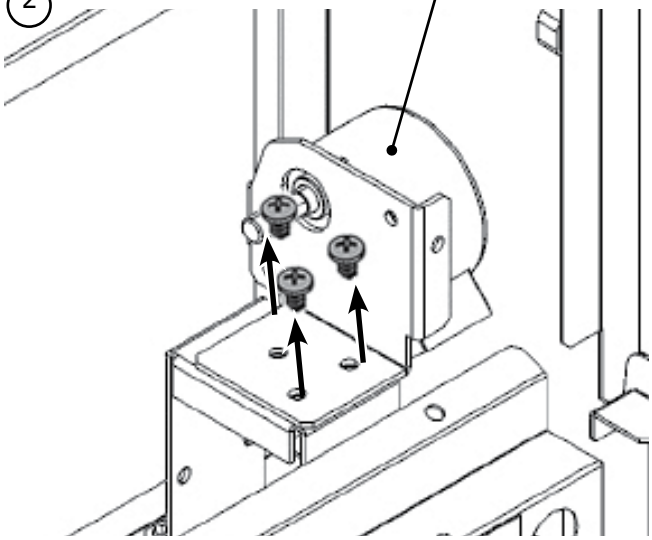

3

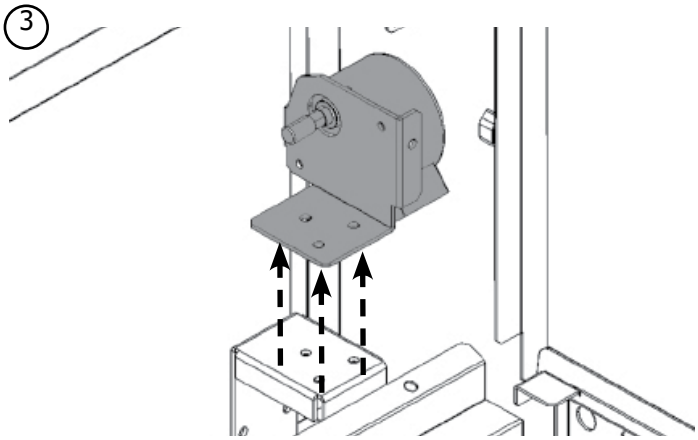

4

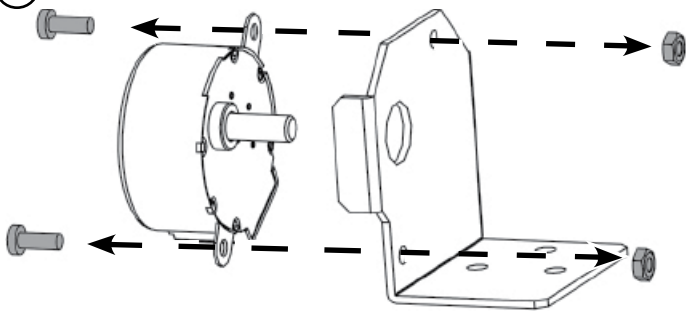

Remove all the wires and connectors. Note the orientation of the connectors.

REMOVING THE DOWNLIGHT

1

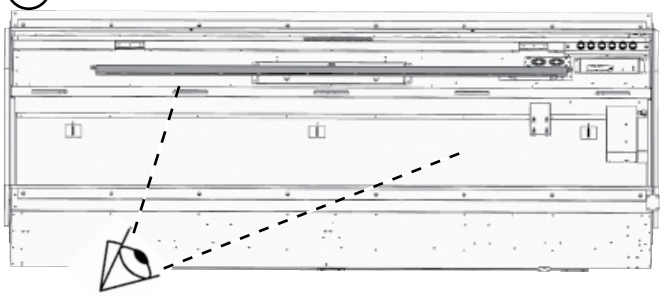

2

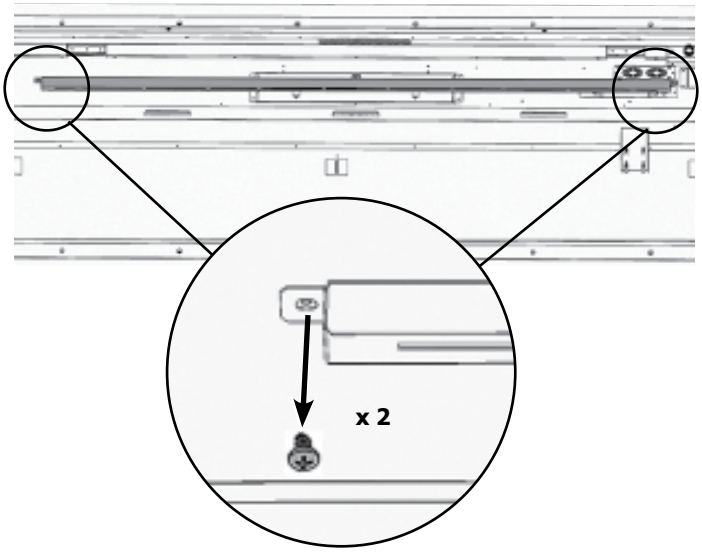

3

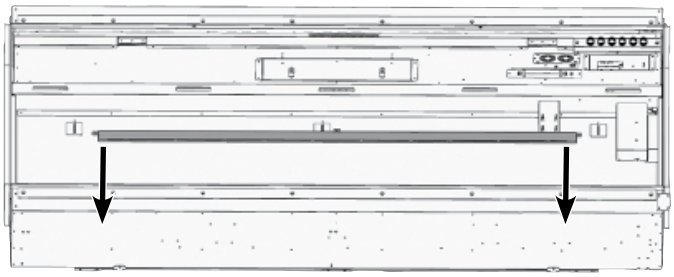

4

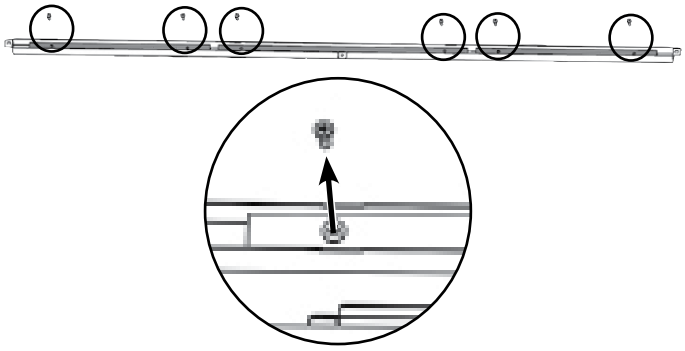

5

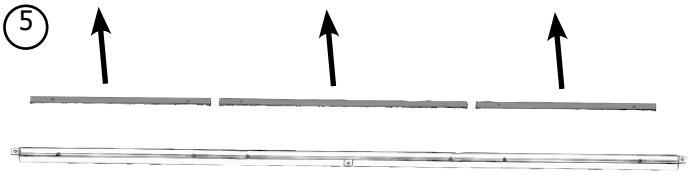

Remove all the wires and connectors. Note the orientation of the connectors.

REMOVING THE RECEIVER

1

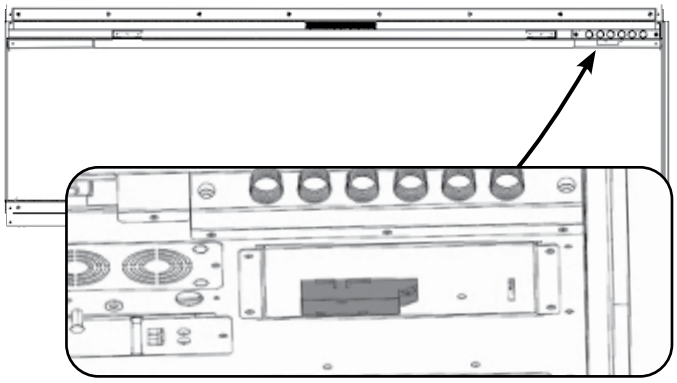

2

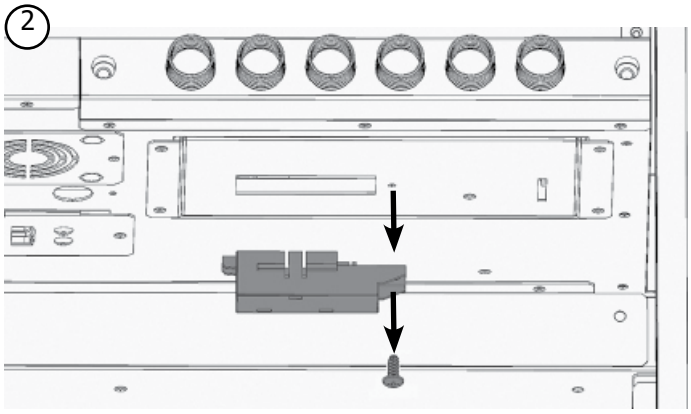

3

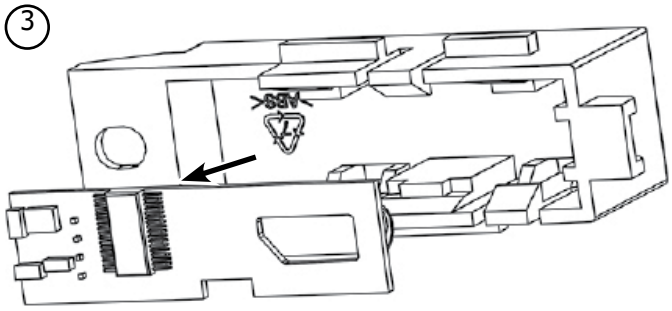

REPLACING THE CONTROL UNIT

1

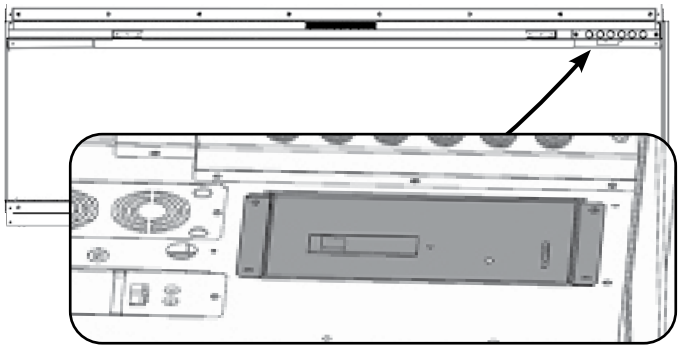

2

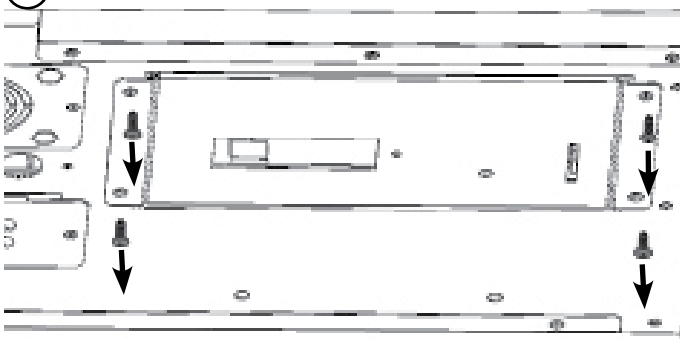

3

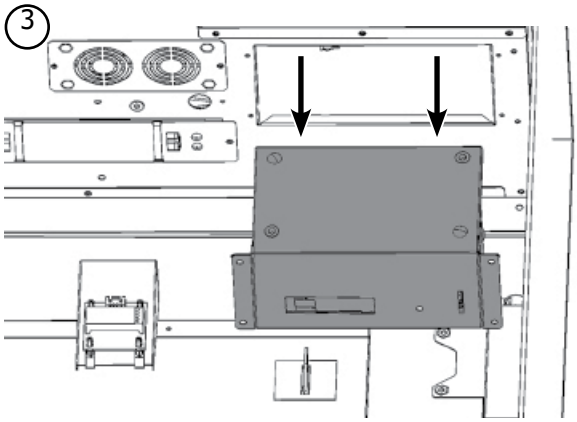

Remove all the wires and connectors. Note the orientation of the connectors.

LED DISPLAY

4

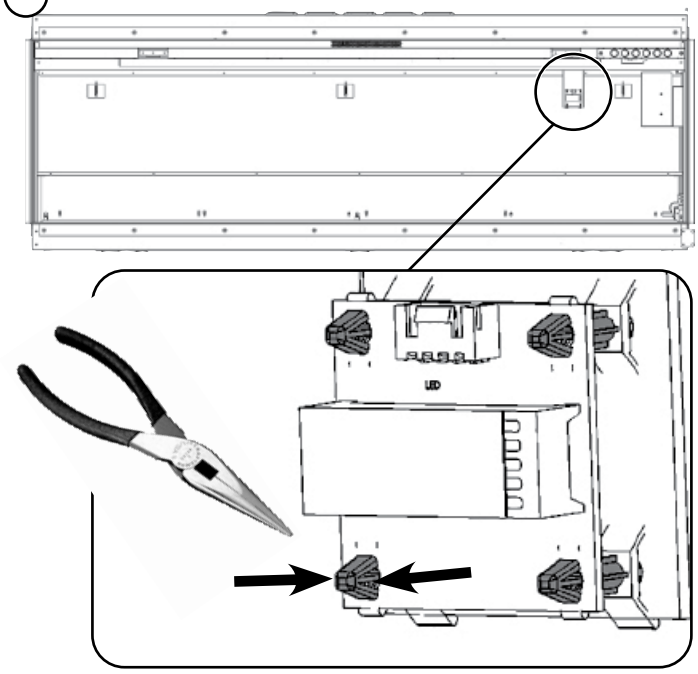

Remove all the wires and connectors. Note the orientation of the connectors.

5

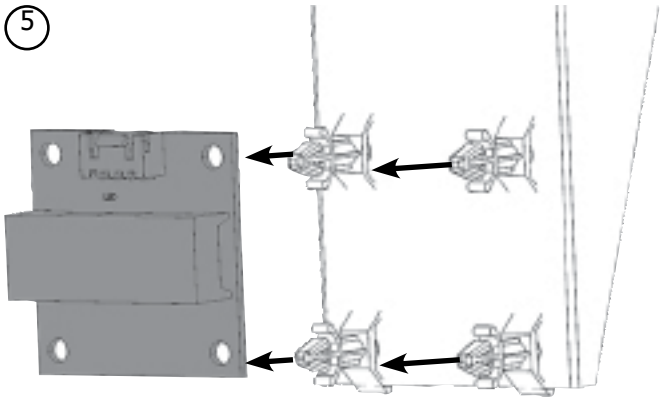

SPEAKER

6

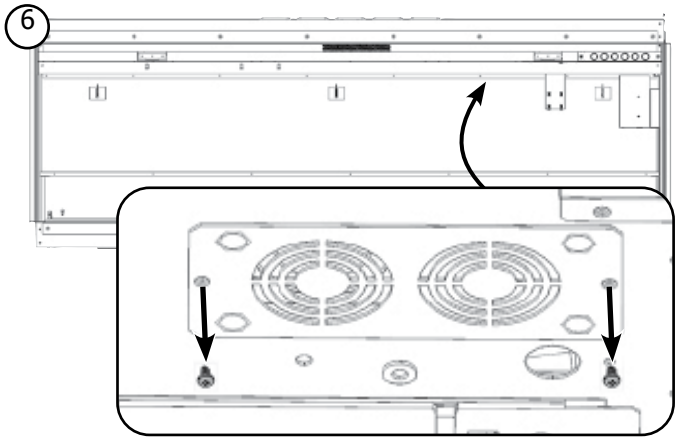

7

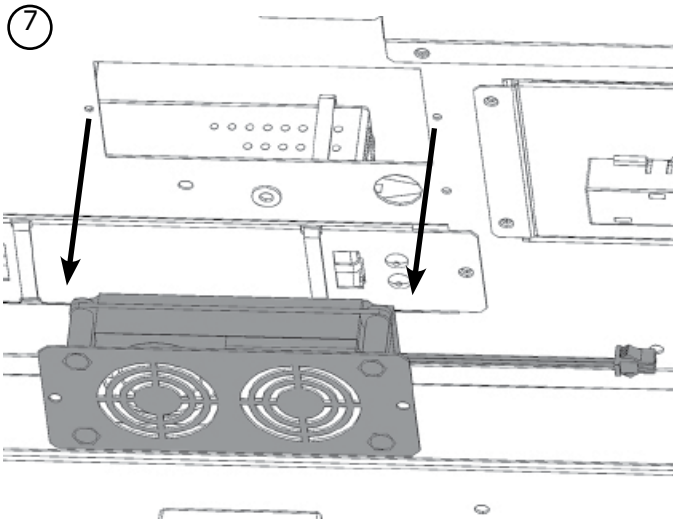

PCB

1

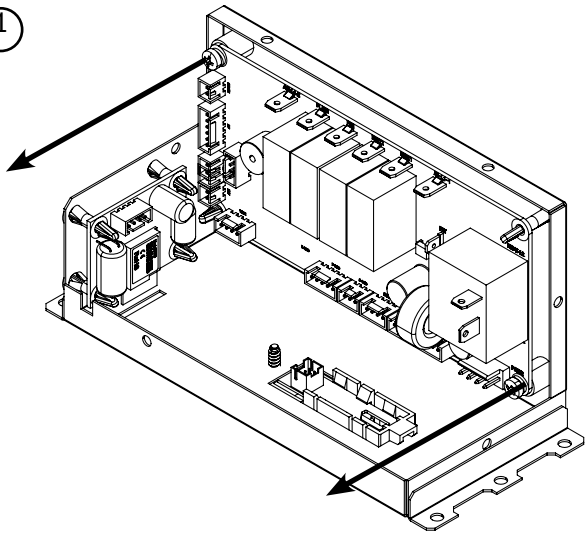

2

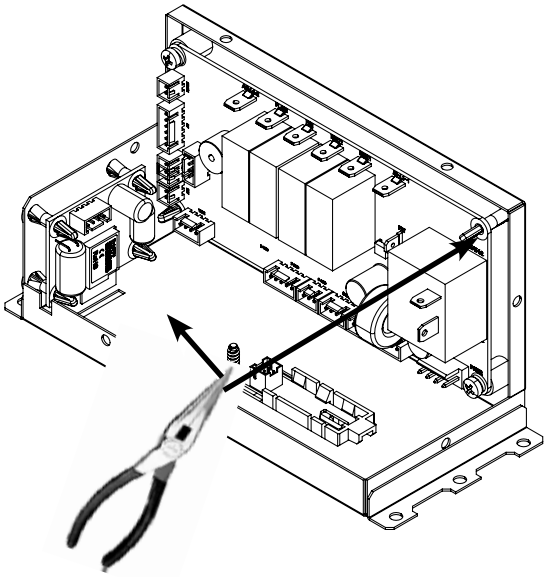

Remove all the wires and connectors. Note the orientation of the connectors.

REPLACING THE HEATER

1

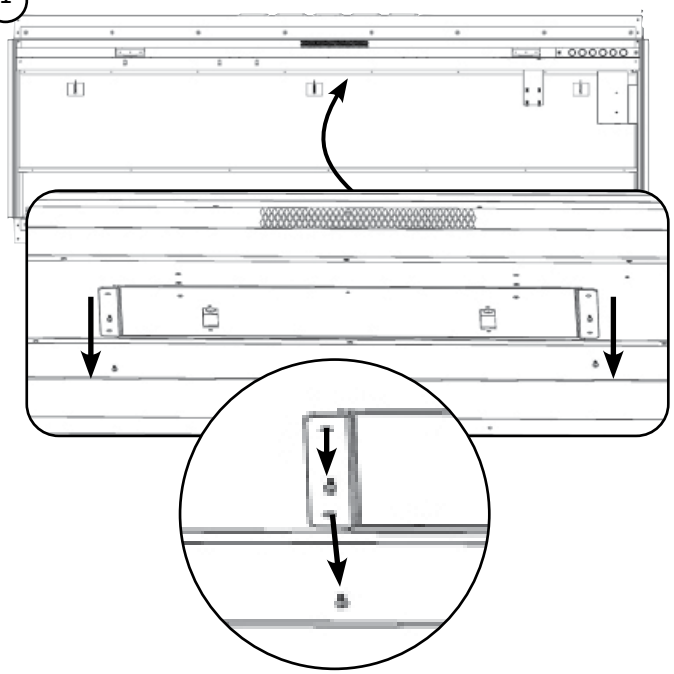

2

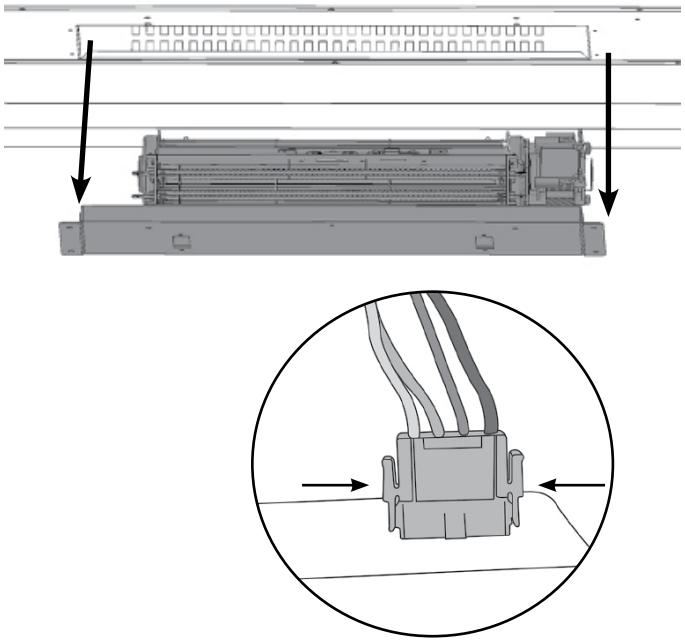

REPLACING THE POWER UNIT

1

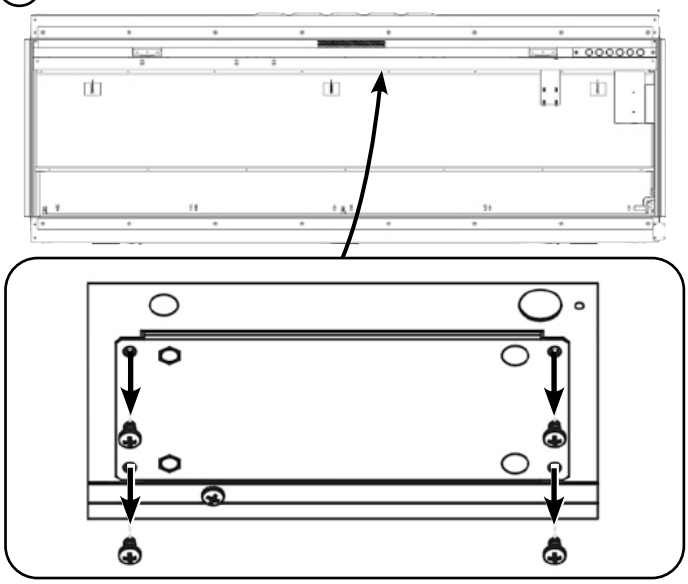

Remove all the wires and connectors. Note the orientation of the connectors.

2

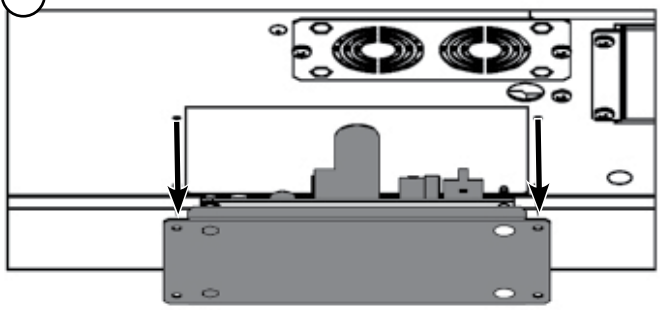

3

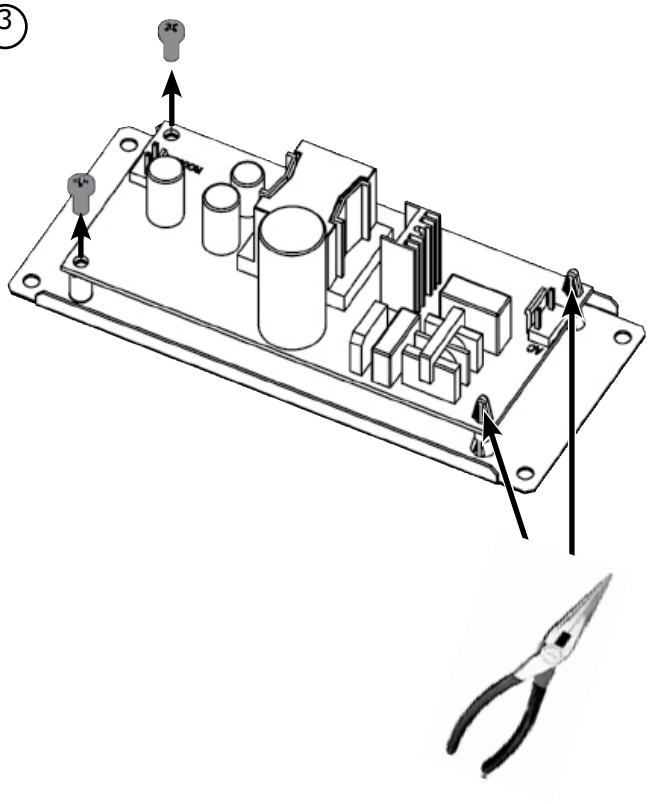

SPARE PARTS LIST

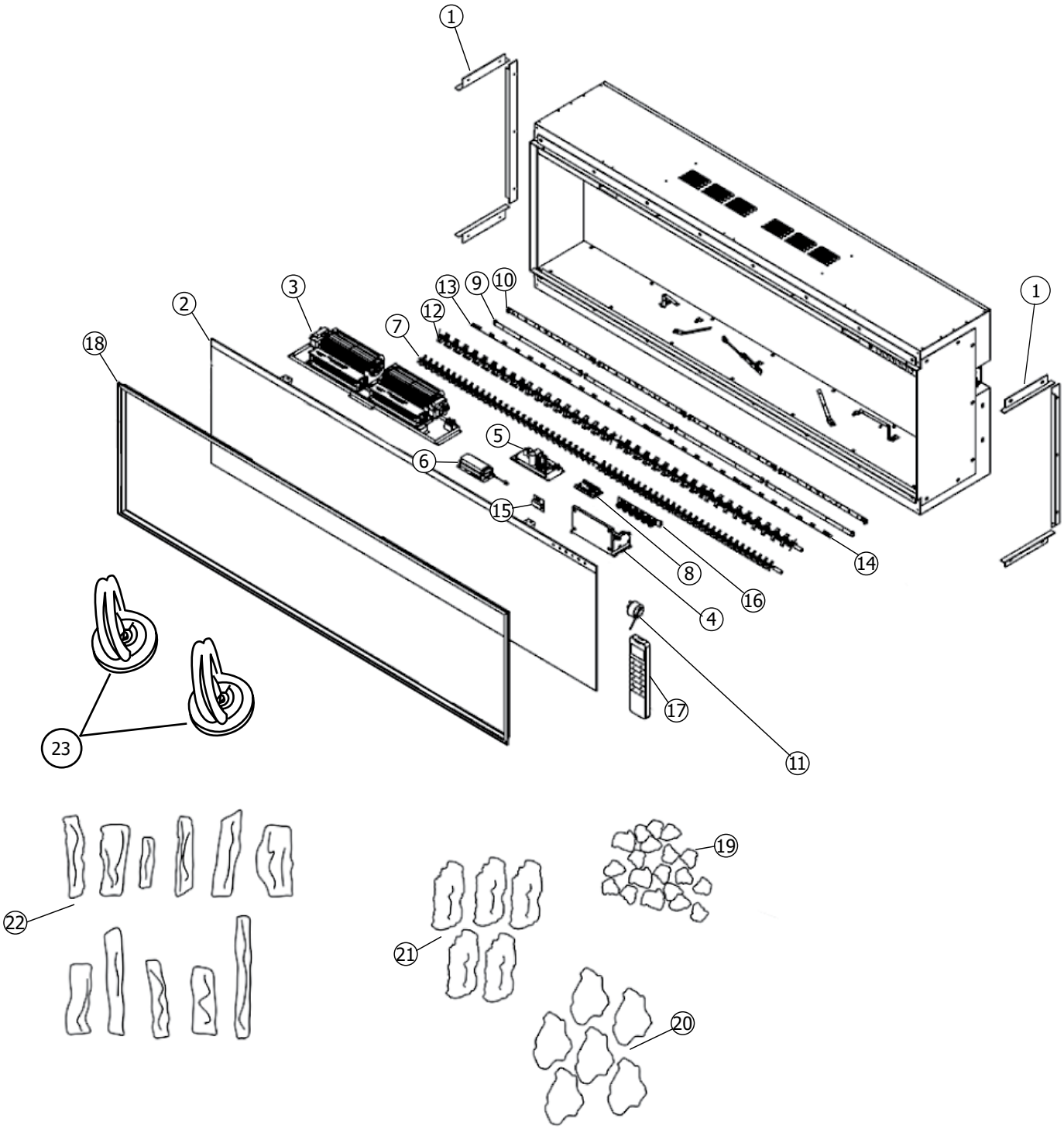

SPARE PARTS LIST

REF.		AVITA EXA120		AVITA EXA160		AVITA EXA190	
		CODE	QTY	CODE	QTY	CODE	QTY
1	BRACKETS (2 & 3 SIDED APPLIANCES ONLY)	GZ18671	1	GZ18671	1	GZ18671	1
2	GLASS	CE2309	1	CE2314	1	CE2316	1
3	FAN HEATER	EL1217	1	EL1217	1	EL1217	1
4	PCB & CONTROL UNIT	EL1218	1	EL1218	1	EL1218	1
5	POWER SUPPLY	EL1182	1	EL1182	1	EL1182	1
6	SPEAKER	EL1183	1	EL1183	1	EL1183	1
7	FUEL BED SPINDLE	EL1184	1	EL1191	1	EL1193	1
8	LED DRIVER	EL1185	1	EL1185	1	EL1185	1
9	FUEL BED LED 1	EL1169	0	EL1169	0	EL1169	6
10	FUEL BED LED 2	EL1170	6	EL1170	8	EL1170	2
11	FLAME/FUEL BED MOTOR	EL1219	2	EL1219	2	EL1219	2
12	FLAME SPINDLE	EL1187	1	EL1192	1	EL1194	1
13	FLAME EFFECT LED 1	EL1179	1	EL1179	0	EL1179	2
14	FLAME EFFECT LED 2	EL1165	2	EL1165	4	EL1165	3
15	LED DISPLAY	EL1188	1	EL1188	1	EL1188	1
16	CONTROL PANEL (BUTTON BOARD)	EL1189	1	EL1189	1	EL1189	1
17	REMOTE	EL1220	1	EL1220	1	EL1220	1
18	FRAME (NARROW)	GZ18723	1	GZ18724	1	GZ18725	1
19	BLACK EMBERS	CE2310	3	CE2310	4	CE2310	4
20	GREY BARK	CE2311	6	CE2311	6	CE2311	6
21	BARK	CE2312	4	CE2312	7	CE2312	7
22	LOG SET	CE2313	1	CE2315	1	CE2317	1
23	SUCTION CUP (SET OF 2)	PL0269	1	PL0269	1	PL0269	1

WIRING DIAGRAM

EXA120

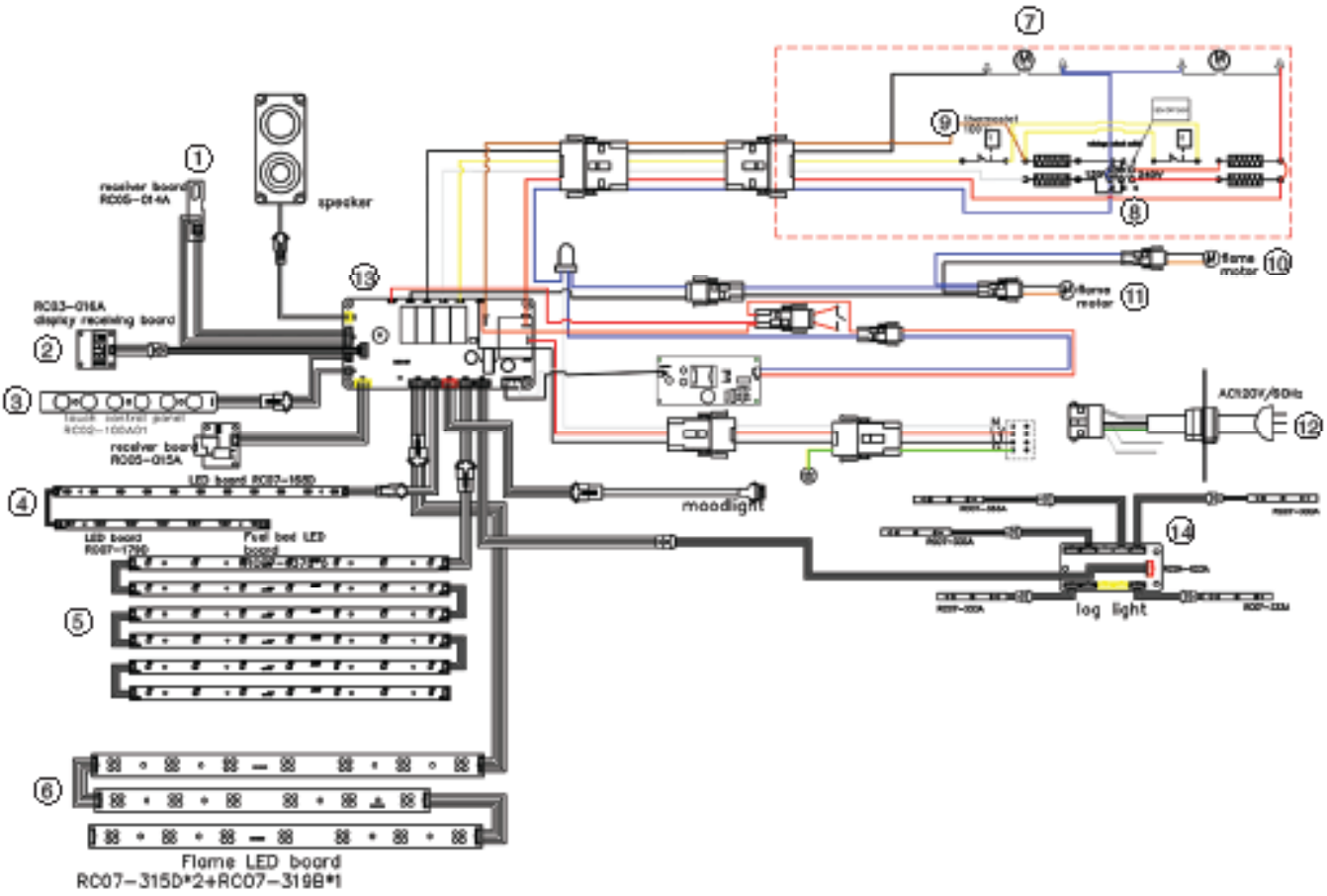

COLOUR CODES	
RD	RED
BU	BLUE
YE	YELLOW
WH	WHITE
BK	BLACK
BN	BROWN
GNYE	GREEN & YELLOW

NO.	COMPONENT
1	Receiver Board
2	LED Display
3	Button Board
4	Top Light LED Board
5	Fuel Effect LED Board
6	Flame Effect LED Board
7	Fan Motor
8	Heater
9	Thermostat
10	Flame Effect Motor
11	Fuel Effect Motor
12	Power Cable
13	PCB
14	LED Driver

EXA160

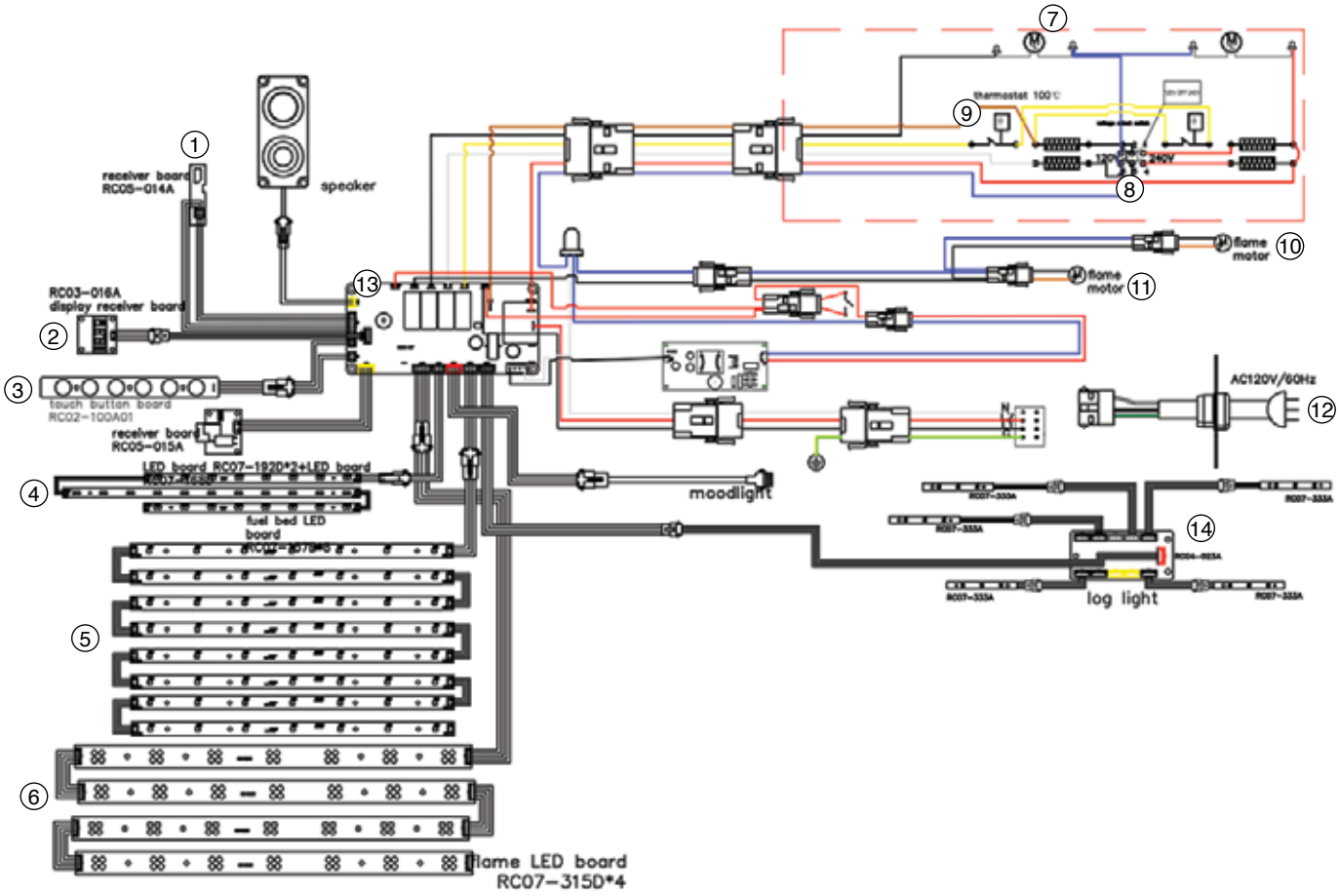

COLOUR CODES	
RD	RED
BU	BLUE
YE	YELLOW
WH	WHITE
BK	BLACK
BN	BROWN
GNYE	GREEN & YELLOW

NO.	COMPONENT
1	Receiver Board
2	LED Display
3	Button Board
4	Top Light LED Board
5	Fuel Effect LED Board
6	Flame Effect LED Board
7	Fan Motor
8	Heater
9	Thermostat
10	Flame Effect Motor
11	Fuel Effect Motor
12	Power Cable
13	PCB
14	LED Driver

EXA190

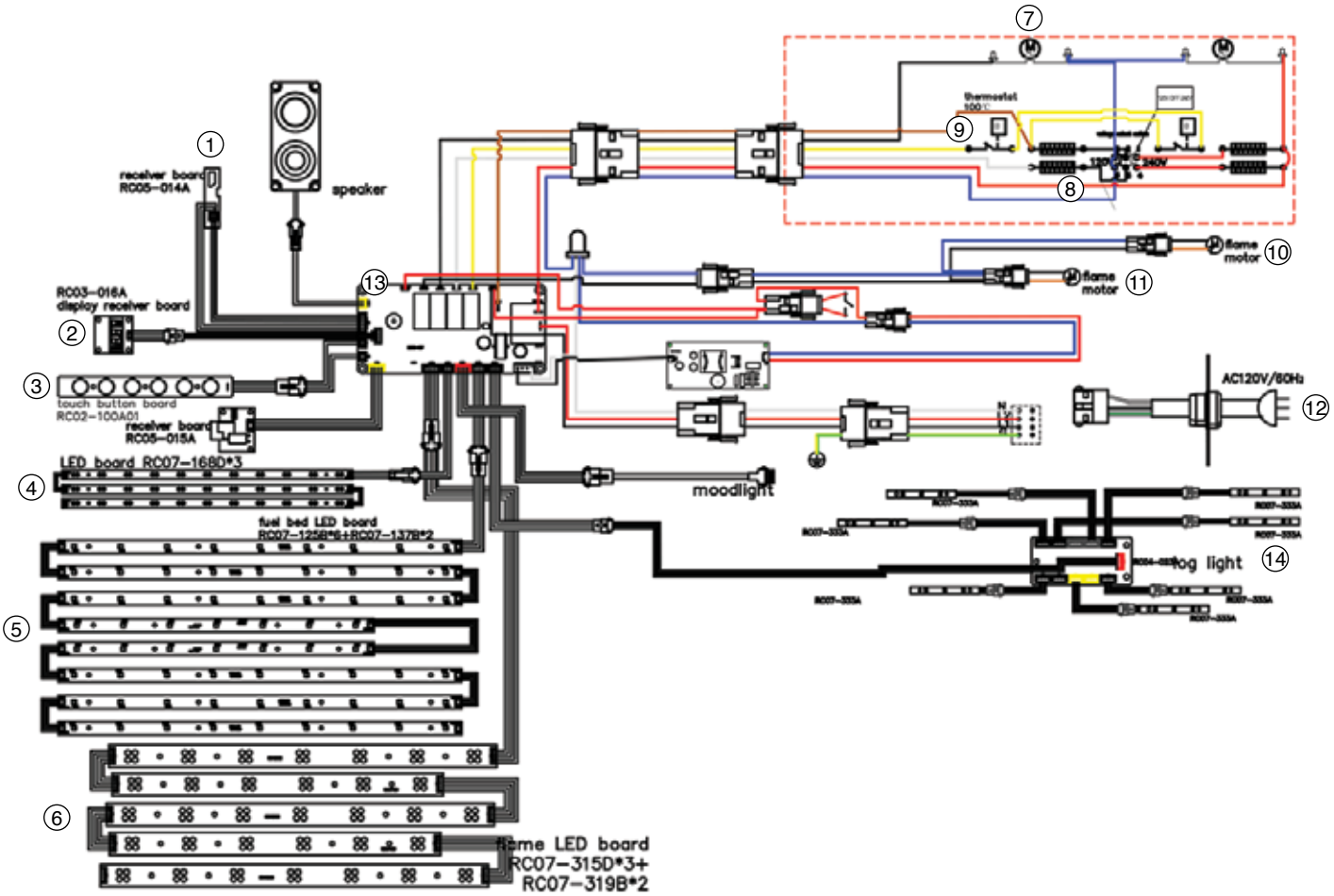

COLOUR CODES	
RD	RED
BU	BLUE
YE	YELLOW
WH	WHITE
BK	BLACK
BN	BROWN
GNYE	GREEN & YELLOW

NO.	COMPONENT
1	Receiver Board
2	LED Display
3	Button Board
4	Top Light LED Board
5	Fuel Effect LED Board
6	Flame Effect LED Board
7	Fan Motor
8	Heater
9	Thermostat
10	Flame Effect Motor
11	Fuel Effect Motor
12	Power Cable
13	PCB
14	LED Driver

INFORMATION REQUIREMENT FOR ELECTRIC LOCAL SPACE HEATERS

Models			Avita EXA120 Avita EXA160 Avita EXA190	
			120 VAC	240 VAC
Heat Output	Nominal Heat Output	P_{nom}	1400 W	2800 W
	Minimum Heat Output	P_{min}	1400 W	2800 W
	Maximum Continuous Heat Output	$P_{max, c}$	1400 W	2800 W
Auxiliary Electricity Consumption	In idle mode	P_{idle}	1.3W	
	In network standby	P_{nsm}	1.3W	
	In off mode	P_o	0.0	
	In standby mode	P_{sm}	N.A.	
	Standby mode with display of information or status	-	NO	
	Seasonal space heating energy efficiency in active mode	$\eta_{S,on}$	98.0%	

TYPE OF HEAT INPUT, FOR ELECTRIC STORAGE LOCAL SPACE HEATERS ONLY	
Manual heat charge control, with integrated thermostat	No
Manual heat charge control with room and/or outdoor temperature feedback	No
Electronic heat charge control with room and/or outdoor temperature feedback	No
Fan assisted heat output	No

TYPE OF HEAT OUTPUT/ROOM TEMPERATURE CONTROL	
Single stage heat output and no room temperature control	No
Two or more manual stages, no room temperature control	No
With mechanic thermostat room temperature control	No
With electronic room temperature control	Yes
Electronic room temperature control plus day timer	Yes
Electronic room temperature control plus week timer	Yes

OTHER CONTROL OPTIONS	
Room temperature control, with presence detection	No
Room temperature control, with open window detection	Yes
With distance control option	Yes
With adaptive start control	Yes
With working time limitation	No
With black bulb sensor	No
Self-Learning Functionality	No
Control Accuracy	Yes

Stovax Gazco Ltd, Spitfire Avenue, Skypark, Clyst Honiton, Exeter, Devon, England EX5 2FR

Indoor Electric Product Warranty

Limited Warranty

FPI Fireplace Products International Ltd. (for Canadian customers) and Fireplace Products US, Inc. (for US customers) (collectively referred to herein as "FPI") extends this Limited Warranty to the original purchaser of this Appliance provided the product remains in the original place of installation. The items covered by this Limited Warranty and the period of such coverage are set forth in the table below.

An Appliance in this policy is defined as an Electric Fireplace, Electric Insert.
This Appliance has only been certified and listed for use indoors.

Some conditions apply (see below).

This Limited Warranty starts on the day the Appliance was purchased.
The Limited Warranty is not transferable, amendable or negotiable under any circumstances.

Indoor Electric Products	Component Coverage	Subsidized Labor Coverage*
	1 year	1 year
Glass Panel	✓	✓
Display Screen Flame Effect Screen	✓	✓
Power Unit	✓	✓
Heater Unit	✓	✓
LED Mood Lighting	✓	✓
Fuel Bed	✓	✓
Flame Effect Spindle Flame Effect LED Board	✓	✓
Fuel Effect Spindle Fuel Effect LED Board	✓	✓
Spindle Motor	✓	✓
Power Cable / Plug Kit	✓	✓
Remote Handset	✓	✓
Media (Pebbles, ember set, crushed glass, ice set logs, driftwood, birch, oak log sets, crystals)	✓	✓
Firebox (defect in manufacture)	✓	✓

Note: Warranty coverage noted above may not be applicable as components/options vary based on appliance purchased.

Conditions:

Warranty protects against defect in manufacture or FPI factory-assembled components only, unless herein specified otherwise.

***This warranty does not cover dealer travel costs, mileage, fuel, tolls for diagnostic or service work. All labor rates paid to authorized dealers are subsidized, pre-determined rates. Dealers may charge you for travel and additional time beyond their subsidy.**

Any part(s) found to be defective during the warranty period as outlined above will be repaired or replaced at FPI's option through an accredited distributor, dealer or pre-approved and assigned agent provided that the defective part is returned to the distributor, dealer or agent for inspection if requested by FPI. Alternatively, FPI may, at its own discretion, fully discharge all of its obligations under warranty by refunding the verified purchase price of the product to the original purchaser. The purchase price must be confirmed by the original Bill of Sale.

IMPORTANT: A 15 amp, 60Hz 120 Volt circuit is required for installation of this Appliance. A dedicated circuit is not required, but is highly recommended to prevent circuit breaker from tripping or fuse failure. Failure to provide adequate power to this Appliance will void your warranty.

NOTE: If hard wiring to the Appliance, this must be completed by a qualified electrician. Failure to do so will void your warranty.

The authorized selling dealer, or an alternative authorized FPI dealer if pre-approved by FPI, is responsible for all in-field diagnosis and service work related to all warranty claims. FPI is not responsible for results or costs of workmanship of unauthorized FPI dealers or agents in the negligence of their service work.

At all times, FPI reserves the right to inspect reported in the field/on location complaints of products claimed to be defective before processing or authorizing any claim. Failure to allow this upon request will void the warranty.

All warranty claims must be submitted by the dealer servicing the claim, including a copy of the Bill of Sale (proof of purchase by you). All claims must be complete and provide full details as requested by FPI to receive consideration for evaluation. **Incomplete claims may be rejected.**

Replacement Appliances to the original purchaser are limited to one per warranty term.

The Appliance must be installed according to all manufacturers' instructions as per the manual.

All Local and National required codes must be met.

The installer is responsible for ensuring the Appliance is operating as designed at the time of installation.

The original purchaser is responsible for the annual maintenance of the Appliance, as outlined in the owner's manual. As outlined below, the warranty may be voided due to problems caused by a lack of maintenance.

Purchased parts: Repair/replacement parts purchased by the consumer from FPI after the original coverage has expired on the Appliance will carry a **90-day** warranty from the purchase date, valid with a receipt only. Any item shown to be defective will be repaired or replaced at our discretion. No labor coverage is included with these parts.

If freight damage has been found either externally or internally, the dealer must be informed within 3 days. All claims as a result of damage must be submitted by the dealer servicing the claim, including a copy of the Bill of Sale (proof of purchase). All claims must be complete and provide full details as requested by FPI to receive consideration for evaluation. **Incomplete claims may be rejected.**

As this is a **1-year** Limited Warranty, if the Appliance needs to be replaced, the Appliance that was purchased at the time of sale might not be replaced with exactly the same model Appliance. In that case, FPI will replace your Appliance with one that is similar at the time of replacement under the terms of this Limited Lifetime Warranty, but ONLY in the event that an item covered by the Limited Lifetime Warranty is found to be defective. Please refer to the table on first page of this warranty for items covered by the Limited Lifetime Warranty. Product changes might be the result of the original Appliance being discontinued, changes in regulatory requirements, product advancements, etc., which are beyond the control of FPI. **This Limited Lifetime Warranty does not cover any installation costs, or costs associated with changes of required clearances for the replacement Appliance, hearth pads, mantles, facing and/or facing materials such as framing, completed walls made of drywall, wood, non- combustible board, tile, brick, stone, marble etc., venting/chimney systems, or components of the chimney system.**

If a suitable replacement is not available, FPI will refund **50%** of the purchase price of the Appliance and any applicable FPI accessories (faceplates, brick panels, media, etc.) purchased at the time of sale. **In no event will FPI refund any portion of the purchase price of, or reimburse costs associated with, any other items, including without limitation, installation of a new unit, changes of required clearances for a new unit, hearth pads, mantles, facing and/or facing materials such as framing, completed walls made of drywall, wood, non-combustible board, tile, brick, stone, marble etc., venting/chimney systems, or components of the chimney system. A copy of the receipt or bill of sale will be necessary to validate the purchase price.**

Exclusions:

This Limited Warranty does not extend to paint, rust or corrosion of any kind due to a lack of maintenance, combustion air provision, corrosive chemicals (i.e. chlorine, salt, air, etc.), batteries.

Malfunction, damage or performance-based issues as a result of environmental conditions, location, chemical damages, installation error, an installation by an unqualified installer, operator error, abuse, misuse, lack of regular maintenance and upkeep, acts of God, weather related problems from hurricanes, tornados, earthquakes, floods, lightning strikes/bolts or acts

of terrorism or war, which result in malfunction of the Appliance are not covered under the terms of this Limited Warranty.

FPI has no obligation to enhance or modify any Appliance once manufactured (i.e. as products evolve, field modifications or upgrades will not be performed on existing Appliances).

Any Appliance showing signs of neglect or misuse will not be covered under the terms of this warranty policy and may void this warranty, including Appliances with rusted or corroded fireboxes that have not been reported as rusted or corroded within **three (3)** months of purchase.

Appliances which show evidence of being operated while damaged, or with problems known to the purchaser and causing further damages will void this warranty.

Appliances where the serial no. has been altered, deleted, removed or made illegible will void this warranty.

Minor movement, expansion and contraction of the steel is normal and is not covered under the terms of this warranty.

Freight damages for products or parts are not covered under the terms of this warranty.

Products made or provided by other manufacturers and used in conjunction with the FPI Appliance without prior authorization from FPI may void this warranty.

Limitations of Liability:

The original purchaser's exclusive remedy under this warranty, and FPI's sole obligation under this Limited Warranty, express or implied, in contract or in tort, shall be limited to replacement, repair, or refund, as outlined above. IN NO EVENT WILL FPI BE LIABLE UNDER THIS WARRANTY FOR ANY INCIDENTAL OR CONSEQUENTIAL COMMERCIAL DAMAGES OR DAMAGES TO PROPERTY. TO THE EXTENT PERMITTED BY APPLICABLE LAW, FPI MAKES NO EXPRESS WARRANTIES OTHER THAN THE WARRANTY SPECIFIED HEREIN. THE DURATION OF ANY IMPLIED WARRANTY IS LIMITED TO DURATION OF THE EXPRESSED WARRANTY SPECIFIED ABOVE. IF IMPLIED WARRANTIES CANNOT BE DISCLAIMED, THEN SUCH WARRANTIES ARE LIMITED IN DURATION TO THE DURATION OF THIS WARRANTY.

Some US states do not allow limitations on how long an implied warranty lasts, or allow exclusion or limitation of incidental or consequential damages, so the above limitations or exclusions may not apply to you.

Customers located outside the US should consult their local, provincial or national legal codes for additional terms which may apply to this warranty.

How to Obtain Warranty Service:

Customers should contact the authorized selling dealer to obtain warranty service. In the event the authorized selling dealer is unable to provide warranty service, please contact FPI by mail at the address listed below. Please include a brief description of the problem and your address, email and telephone contact information. A representative will contact you to make arrangements for an inspection and/or warranty service.

Canadian Warrantor:

FPI Fireplace Products International Ltd.
6988 Venture St.
Delta, British Columbia
Canada, V4G 1H4

US Warrantor:

Fireplace Products U.S., Inc.
PO Box 2189 PMB 125
Blaine, WA
United States, 98231

Or contact the Regency Customer Care Centre at 1-800-442-7432 (phone) /604-946-4349 (fax) /customerservice@regency-fire.com (e-mail)

Product Registration and Customer Support:

Thank you for choosing a Regency Fireplace. Regency strives to be a world leader in the design, manufacture, and marketing of hearth products. To provide the best support for your product, we request that you complete a product registration form at http://www.regency-fire.com/Customer-Care/Warranty-Registration.aspx within **ninety (90)** days of purchase.

Warranty Registration Card

Product Registration and Customer Support:

Thank you for choosing a Regency Fireplace. Regency strives to be a world leader in the design, manufacture, and marketing of hearth products. To provide the best support for your product, we request that you complete a product registration form found on our Web Site under Customer Care within ninety (90) days of purchase.

For purchases made in **CANADA or the UNITED STATES**:

http://www.regency-fire.com/Customer-Care/Warranty-Registration.aspx

For purchases made in AUSTRALIA:

http://www.regency-fire.com.au/Customer-Care/Warranty-Registration.aspx

You may also complete the warranty registration form below to register your Regency Fireplace Product and mail and/or fax it back to us, and we will register the warranty for you. It is important you provide us with all the information below in order for us to serve you better.

Warranty Registration Form (or Register online immediately at the above Web Site):

Warranty Details	
Serial Number (required):	
Purchase Date (required) (mm/dd/yyyy):	
Product Details	
Product Model (required):	
Dealer Details	
Dealer Name (required):	
Dealer Address:	
Dealer Phone #:	
Installer:	
Date Installed (mm/dd/yyyy):	
Your Contact Details (required)	
Name:	
Address:	
Phone:	
Email:	

For purchases made in CANADA:

FPI Fireplace Products International Ltd.
6988 Venture St.
Delta, British Columbia
Canada, V4G 1H4

Phone: 604-946-5155
Fax: 1-866-393-2806

For purchases made in the UNITED STATES:

Fireplace Products US, Inc.

PO Box 2189 PMB 125
Blaine, WA
United States, 98231

Phone: 604-946-5155
Fax: 1-866-393-2806

For purchases made in AUSTRALIA:

Fireplace Products Australia Pty Ltd
99 Colemans Road
Dandenong South, Vic.
Australia, 3175

Phone: +61 3 9799 7277
Fax: +61 3 9799 7822

For fireplace care and tips and answers to most common questions please visit our Customer Care section on our Web Site. Please feel free to contact your selling dealer if you have any questions about your Regency product.

RECYCLING

PRODUCT LIFE CYCLE:
By recycling your used appliances, you divert waste from your local landfills and help the environment. You also reduce the need for raw materials to manufacture new products. Contact your local municipality for appliance recycling services, local recycling programs, or appliance removal services to ensure your Regency appliance components, and packaging are properly recycled.

Manufactured by:
Gazco Limited, Spitfire Avenue, Skypark, Clyst Honiton, Exeter, Devon, England EX5 2FR

Installer: Please complete the following information

Dealer Name & Address: _____

_____

Installer: _____

Phone #: _____

Date Installed: _____

Serial #: _____

Regency© is a trademark of FPI Fireplace Products International Ltd.
© Copyright 2026, FPI Fireplace Products International Ltd. All rights reserved.

Printed in Canada