REGENCY
FIREPLACE PRODUCTS

Classic™ Freestanding Woodstove F2450-2

Owners & Installation Manual



French Manual Download:
Manuel en Français : https://bit.ly/4kiiprH

www.regency-fire.com

MODEL: F2450-2

Tested by:

0219WS033S

Installer: **Please complete the details on the back cover and leave this manual with the homeowner.**
Homeowner: **Please keep these instructions for future reference.**

FPI FIREPLACE PRODUCTS INTERNATIONAL LTD. 6988 Venture St., Delta, BC Canada, V4G 1H4

Thank you for purchasing a
REGENCY FIREPLACE PRODUCT.

The pride of workmanship that goes into each of our products will give you years of trouble-free enjoyment. Should you have any questions about your product that are not covered in this manual, please contact the **REGENCY DEALER** in your area.

"**This wood heater has a manufacturer set minimum low burn rate that must not be altered. It is against federal regulations to alter this setting or otherwise operate this wood heater in a manner inconsistent with operating instructions in this manual." Failure to follow the manual details can lead to smoke and CO emissions spilling into the home. It is recommended to have monitors in areas that are expected to generate CO such as heater fueling areas.**

"**U.S. ENVIRONMENTAL PROTECTION AGENCY Certified to comply with 2020 particulate emission standards using crib wood." Tested to Method 28R, E2780-10, E2515-11. Model Regency F2450-2 – 1.6 g/hr.**

"This manual describes the installation and operation of the Regency F2450-2 wood heater. This heater meets the 2020 U.S. Environmental Protection Agency's crib wood emission limits for wood heaters. Under specific test conditions this heater has been shown to deliver heat at rates ranging from 12,900 BTU/hr to 30,000 BTU/hr." Efficiency is determined using the B415 method resulting in lower and higher heat values. This heater generates the best efficiency when operated using well-seasoned wood and installed in the main living areas where the majority of the chimney is within the building envelope. "This wood heater needs periodic inspection and repair for proper operation.

It is against federal regulation to operate this wood heater in a manner inconsistent with operating instructions in this manual."

CAUTION: BURN UNTREATED WOOD ONLY. OTHER MATERIALS SUCH AS WOOD PRESERVATIVES, METAL FOILS, COAL, PLASTIC,GARBAGE, SULPHUR OR OIL MAY DAMAGE THE STOVE.

"This heater is designed to burn natural wood only. Higher efficiencies and lower emissions generally result when burning air dried seasoned hardwoods, as compared to softwoods or to green or freshly cut hardwoods."

DO NOT BURN:

- Treated wood
- Coal
- Garbage
- Cardboard
- Solvents
- Colored Paper
- Bio Bricks
- Trash
- **Lawn clippings or yard waste**
- **Materials containing rubber including tires**
- **Materials containing plastic**
- **Waste petroleum products , paints or paint thinners or asphalt products**
- **Materials containing asbestos**
- **Construction or demolition debris**
- **Railroad ties**
- **Manure or animal remains**
- **Saltwater driftwood or other previously salt water saturated materials**
- **Unseasoned wood**
- **Paper products, cardboard, plywood or particle board. The prohibition against burning these materials does not prohibit the use of fire starters made from paper, cardboard, saw dust, wax and similar substances for the purpose of starting a fire in a wood heater.**

Burning these materials may result in release of toxic fumes or render the heater ineffective and cause smoke.

The authority having jurisdiction (such as Municipal Building Department, Fire Department, Fire Prevention Bureau, etc.) should be consulted before installation to determine the need to obtain a permit.

This unit must be connected to either a listed factory built chimney suitable for use with solid fuels and conforming to, ULC629 in Canada or UL-103HT in the United States of America. or code approved masonry chimney with flue liner.

F2450-2 is tested and certified to ULC-S627-2023 and UL1482-2022.

SAVE THESE INSTRUCTIONS

NATIONAL FIREPLACE INSTITUTE NFI CERTIFIED www.nficertified.org

We recommend that our products be installed and serviced by professionals who are certified in the U.S. by the National Fireplace Institute® (NFI) or in Canada by Wood Energy Technical Training (WETT).

Wood Energy Technical Training

WARNING: Cancer and Reproductive Harm
www.P65Warnings.ca.gov
919-874

table of contents

Safety Decal for F2450-2 4

Dimensions

Unit Dimensions 5
Outside Air Dimensions 5

Installation

Modular Installation Options 6
Stove Assembly Prior To Installation 7
Airmate Assembly 7
Rear Heat Deflector Assembly 7
Side Shield Adjustment 7
Pedestal Assembly Installation 8
Logo Installation 8
Bottom Heat Shield and Legs Installation 8
Room Air - Important 9
Minimum Clearance To Combustible Materials 9
Minimum Alcove Clearance and Clearance to Combustible Materials 10
Floor Protection 10
Floor Protection (Corner Installation) 11
Step-By-Step Chimney And Connector Installation 12
Masonry Chimney 13
Masonry Fireplace 13
Factory Built Chimney 13
Combustible Wall Chimney Connector Pass-throughs 14
Recommended Heights For Woodstove Flue 15
Mobile Home Installation (USA Only) 16
Optional Outside Air Kit 17
Brick Installation 18
Wood Handle & Door Assembly 19
Flue Baffle & Secondary Air Tube Installation 20
Fan Installation 21
Stainless Steel Smoke Deflector Installation 22

Operation

Seasoned Firewood 23
Operating Instructions 23
Draft Control 23
First Fire 24
Fan Operation 25
Ash Disposal 25
Ash Drawer Operating Guidelines 25
Safety Guidelines and Warnings 25

Maintenance

Classic Door Handle Replacement 26
Glass Replacement 26
Maintenance 27
Creosote 27
Ways to Prevent and Keep Unit Free of Creosote 27
Door Gasket 27
Glass Maintenance 27
Wood Storage 27
Secondary Air Tube Removal/Installation 28
Annual Maintenance 28

Parts

Main Assembly 29
Bases 31
Brick Kit 32

Warranty

Warranty 34
Recycling 38

CAUTION: To avoid burns or wood splinters, when opening/closing the fuel door or adding wood to the fire, You should always wear appropriate protective gloves to protect your hands from the heat being emitted from this fireplace.

safety decal

This is a copy of the label that accompanies each Regency Freestanding Woodstove (F2450-2). We have printed a copy of the contents here for your review.

NOTE: Regency units are constantly being improved. Check the label on the unit and if there is a difference, the label on the unit is the correct one.

The serial # label will be affixed to the rear heat-shield and will be located on the right hand side if facing the unit from the front.

Duplicate Serial Number **602**

0219WS033S

LISTED SPACE HEATER, SOLID FUEL TYPE, ALSO SUITABLE FOR MOBILE HOME INSTALLATION / APPAREIL DE CHAUFFAGE AMBIANT HOMOLOGUÉ À COMBUSTIBLE SOLIDE, CONVENANT AUSSI POUR INSTALLATION DANS UNE MAISON MOBILE

MODEL: REGENCY MEDIUM FREESTANDING STOVE - F2450-2

TESTED TO: ULC S627-2023 / UL 1482-2022

Approved for mobile homes in the US and for transportable buildings in Canada. / Cet appareil est homologué pour être installé dans une maison mobile aux États-Unis et pour les bâtiments transportables au Canada.

DO NOT REMOVE THIS LABEL/
NE RETIREZ PAS CETTE ÉTIQUETTE

602

U.S. ENVIRONMENTAL PROTECTION AGENCY Certified to comply with 2020 particulate emission standards using crib wood." Tested and listed to Method 28R, E2780-10, E2515-11. Model Regency F2450-2 – 1.6 g /hr. This wood heater needs periodic inspection and repair for proper operation. Consult the owner's manual for further information.
It is against federal regulations to operate this wood heater in a manner inconsistent with the operating instructions in the owner's manual.
Certifié conforme aux normes 2020 du U.S. ENVIRONMENTAL PROTECTION AGENCY en matière d'émission de particules de bois en utilisant le bois d'essai normalisé. Testé et approuvé par la Méthode 28R, E2780-10, E2515-11. Modèle Regency F2450-2 – 1,6 g /h. Cet appareil de chauffage au bois doit être inspecté périodiquement et réparé pour fonctionner correctement. Consulter le manuel d'installation pour plus d'information. La réglementation fédérale interdit de faire fonctionner un tel appareil si les consignes d'utilisation contenues dans le présent manuel ne sont pas respectées.
INSTALL AND USE ONLY IN ACCORDANCE WITH THE MANUFACTURER'S INSTALLATION AND OPERATING INSTRUCTIONS. CONTACT LOCAL BUILDING OR FIRE OFFICIALS ABOUT RESTRICTIONS AND INSTALLATION INSPECTION IN YOUR AREA. USE 150 MM (6 IN.) DIAMETER MINIMUM 24 MSG BLACK OR 26 MSG BLUED STEEL CONNECTOR WITH LISTED UL103 HT FACTORY-BUILT CHIMNEY SUITABLE FOR USE WITH SOLID FUELS OR MASONRY CHIMNEY.
SEE LOCAL BUILDING CODE AND MANUFACTURER'S INSTRUCTIONS FOR PRECAUTIONS REQUIRED FOR PASSING A CHIMNEY THROUGH A COMBUSTIBLE WALL OR CEILING.
DO NOT PASS CHIMNEY CONNECTOR THROUGH COMBUSTIBLE WALL OR CEILING. DO NOT CONNECT THIS UNIT TO A CHIMNEY FLUE SERVING ANOTHER APPLIANCE.
INSTALLER ET UTILISER SEULEMENT SELON LES CONSIGNES D'INSTALLATION ET D'UTILISATION DU FABRICANT. CONTACTER LES RESPONSABLES DU BÂTIMENT OU DU SERVICE-INCENDIE DE VOTRE RÉGION POUR CONNAÎTRE LES RESTRICTIONS ET EXIGENCES D'INSPECTION DANS VOTRE RÉGION. UTILISER UN CONNECTEUR D'UN DIAMÈTRE MINIMAL DE 150 MM (6 PO) 24 MSG EN ACIER NOIR OU 26 MSG EN ACIER BRONZÉ AVEC CHEMINÉE PRÉFABRIQUÉE HOMOLOGUÉE UL103 HT CONÇUE POUR ÊTRE UTILISÉE AVEC DES COMBUSTIBLES SOLIDES OU UNE CHEMINÉE EN MAÇONNERIE.
VOIR LE CODE DU BÂTIMENT LOCAL ET LES INSTRUCTIONS DU FABRICANT CONCERNANT LES PRÉCAUTIONS D'INSTALLATION D'UNE CHEMINÉE TRAVERSANT UN MUR OU UN PLAFOND EN MATÉRIAUX COMBUSTIBLES. NE PAS FAIRE TRAVERSER LE CONNECTEUR DE CHEMINÉE DANS UN MUR OU PLAFOND EN MATÉRIAUX COMBUSTIBLES. NE PAS RACCORDER CE POÊLE À BOIS À UN CONDUIT DE CHEMINÉE DESSERVANT UN AUTRE APPAREIL.
MINIMUM ALCOVE CEILING HEIGHT: 2109 MM / 83" MAXIMUM ALCOVE DEPTH 1219 MM / 48".
MINIMUM CLEARANCES FOR HORIZONTAL CONNECTOR TO CEILING: 405 MM / 16".
THE SPACE BENEATH THE HEATER MUST NOT BE OBSTRUCTED. OPERATE ONLY WITH FIREBRICKS IN PLACE.
FOR USE WITH SOLID WOOD FUEL ONLY. USE OF OTHER FUELS MAY DAMAGE HEATER AND CREATE A HAZARDOUS CONDITION. DO NOT OBSTRUCT COMBUSTION AIR OPENINGS. OPERATE ONLY WITH FIREBRICKS IN PLACE. RISK OF SMOKE AND FLAME SPILLAGE. OPERATE ONLY WITH DOORS FULLY CLOSED. IF INSTALLED IN A MOBILE HOME OPERATE ONLY WITH DOORS FULLY CLOSED - OPEN FEED DOOR TO FEED FIRE ONLY. DO NOT USE GRATE OR ELEVATE FIRE. BUILD WOOD FIRE DIRECTLY ON HEARTH. DO NOT OVERFIRE - IF HEATER OR CHIMNEY CONNECTOR GLOWS YOU ARE OVERFIRING. INSPECT AND CLEAN CHIMNEY AND CONNECTOR FREQUENTLY. UNDER CERTAIN CONDITIONS OF USE CREOSOTE BUILDUP MAY OCCUR RAPIDLY. KEEP FURNISHINGS AND OTHER COMBUSTIBLE MATERIAL AWAY FROM HEATER. REPLACE GLASS ONLY WITH NEOCERAM GLASS. COMBUSTIBLE FLOOR MUST BE PROTECTED BY NON-COMBUSTIBLE MATERIAL EXTENDING BENEATH THE HEATER AND TO THE FRONT AND SIDES AS INDICATED OR TO THE NEAREST PERMITTED COMBUSTIBLE MATERIAL.
OPTIONAL COMPONENT: FAN PART #846-515, ELECTRICAL RATING: VOLTS 115, 60 HZ, 2 AMPS.
DANGER: RISK OF ELECTRIC SHOCK. DISCONNECT POWER BEFORE SERVICING UNIT. DO NOT ROUTE POWER CORD UNDER OR IN FRONT OF APPLIANCE.
COMPONENTS REQUIRED FOR MOBILE HOME INSTALLATION: OUTSIDE AIR KIT
IN CANADA: LISTED ULCS 629 CHIMNEY. USE CHIMNEY COMPONENTS AS SPECIFIED IN INSTALLATION/INSTRUCTIONS
IN USA: LISTED UL 103 HT CHIMNEY
WARNING: ONLY USE LISTED REGENCY OPTIONS SUCH AS LEGS, AIRMATE, FAN AS SHOWN IN THE INSTALLATION MANUAL.
CAUTION: BURNING OF MATERIALS OTHER THAN SPECIFIED MAY CAUSE DAMAGE TO THE UNIT.
CAUTION: MOVING PARTS MAY CAUSE INJURY.
HAUTEUR MINIMALE DU PLAFOND DE L'ALCÔVE : 2109 MM / 83 PO PROFONDEUR MAXIMALE DE L'ALCÔVE : 1219 MM / 48 PO
DÉGAGEMENT MINIMAL DU PLAFOND POUR UN CONNECTEUR HORIZONTAL : 405 MM / 16 PO.
L'ESPACE SOUS LE POÊLE NE DOIT PAS ÊTRE OBSTRUÉ. UTILISER SEULEMENT AVEC LES BRIQUES RÉFRACTAIRES EN PLACE.
À UTILISER AVEC DU BOIS SOLIDE SEULEMENT. L'UTILISATION D'AUTRES COMBUSTIBLES PEUT ENDOMMAGER LE POÊLE ET CRÉER UNE CONDITION DANGEREUSE. NE PAS OBSTRUER LES OUVERTURES D'AIR DE COMBUSTION. UTILISER SEULEMENT AVEC LA PORTE FERMÉE – OUVRIR SEULEMENT LA PORTE DE CHARGEMENT POUR ALIMENTER LE FEU. NE PAS UTILISER DE GRILLE À BÛCHES NI SURÉLEVER LE FEU. MONTER LE FEU DE BOIS DIRECTEMENT SUR L'ÂTRE. NE PAS SURCHAUFFER – SI LE POÊLE OU LE CONNECTEUR DE CHEMINÉE SE MET À ROUGIR, RISQUE DE SURCHAUFFAGE. INSPECTER ET NETTOYER FRÉQUEMMENT LA CHEMINÉE ET LE CONNECTEUR. DANS CERTAINES CONDITIONS D'UTILISATION, UN DÉPÔT DE CRÉOSOTE PEUT SE FORMER RAPIDEMENT. GARDER LES MEUBLES ET AUTRES MATÉRIAUX COMBUSTIBLES ÉLOIGNÉS DU POÊLE. REMPLACER LA VITRE SEULEMENT PAR DU VERRE EN NEOCERAM. LE PLANCHER COMBUSTIBLE DOIT ÊTRE PROTÉGÉ PAR DES MATÉRIAUX NON COMBUSTIBLES DÉPASSANT SUR LE DESSOUS, LE DEVANT ET LES CÔTÉS DU POÊLE, TEL QU'INDIQUÉ, OU JUSQU'AU MATÉRIAU COMBUSTIBLE LE PLUS PRÈS PERMIS.
COMPOSANTS EN OPTION : VENTILATEUR PIÈCE N°846-515, ALIMENTATION ÉLECTRIQUE : 115 VOLTS, 60 HZ, 2 AMP.
DANGER : RISQUE D'ÉLECTROCUTION. DÉCONNECTER L'ALIMENTATION ÉLECTRIQUE AVANT D'EFFECTUER L'ENTRETIEN DU POÊLE. NE PAS INSTALLER LE CORDON ÉLECTRIQUE SOUS OU DEVANT L'APPAREIL. COMPOSANTS EXIGÉS POUR INSTALLATION DANS UNE MAISON MOBILE : KIT DE PRISE D'AIR EXTÉRIEUR.
AU CANADA : CHEMINÉE HOMOLOGUÉE ULCS 629. UTILISER LES PIÈCES DE LA CHEMINÉE TEL QUE SPÉCIFIÉ DANS LES CONSIGNES D'INSTALLATION.
AUX ÉTATS-UNIS : CHEMINÉE HOMOLOGUÉE UL103HT.
AVERTISSEMENT : UTILISER SEULEMENT LES OPTIONS HOMOLOGUÉES PAR REGENCY COMME LES PATTES, LE DIFFUSEUR AIRMATE, LE VENTILATEUR COMME ILLUTRÉ DANE LE MANUEL D'INSTALLATION. ATTENTION : COMBUSTION DE TOUT MATÉRIAU NON SPÉCIFIÉ PEUT ENDOMMAGER L'APPAREIL.
ATTENTION : LE DÉPLACEMENT DES PIÈCES PEUT ENTRAÎNER DES BLESSURES.

MANUFACTURED BY/ FABRIQUÉ PAR :
FPI FIREPLACE PRODUCTS INTERNATIONAL LTD.
6988 VENTURE ST.
DELTA, BC V4G 1H4

REGENCY FIREPLACE PRODUCTS

MINIMUM CLEARANCES TO COMBUSTIBLE MATERIALS
DÉGAGEMENTS MINIMAUX PAR RAPPORT AUX MATÉRIAUX COMBUSTIBLES

F2450-2 WITH AIRMATE SHIELD			F2450-2 WITH REAR DEFLECTOR		
MEASURE FROM	HEATER	FLUE CENTER-LINE	MEASURE FROM	HEATER	FLUE CENTER-LINE
RESIDENTIAL INSTALLATION USING SINGLE WALL CONNECTOR			RESIDENTIAL INSTALLATION USING SINGLE WALL CONNECTOR		
SIDEWALL	A 406 mm / 16 in	D 711 mm / 28 in	SIDEWALL	A 406 mm / 16 in	D 711 mm / 28 in
BACKWALL	B 241 mm / 9.5 in	E 406 mm / 16 in	BACKWALL	B 292 mm / 11.5 in	E 457 mm / 18 in
CORNER	C 203 mm / 8 in	F 508 mm / 20 in	CORNER	C 203 mm / 8 in	F 508 mm / 20 in
INSTALLATION USING LISTED DOUBLE WALL CONNECTOR - MOBILE HOME			INSTALLATION USING LISTED DOUBLE WALL CONNECTOR - MOBILE HOME		
SIDEWALL	A 381 mm / 15 in	D 686 mm / 27 in	SIDEWALL	A 381 mm / 15 in	D 686 mm / 27 in
BACKWALL	B 203 mm / 8 in	E 368 mm / 14.5 in	BACKWALL	B 254 mm / 10 in	E 419 mm / 16.5 in
CORNER	C 152 mm / 6 in	F 457 mm / 18 in	CORNER	C 152 mm / 6 in	F 457 mm / 18 in
INSTALLATION USING LISTED DOUBLE WALL CONNECTOR - RESIDENTIAL CLOSE CLEARANCE			INSTALLATION USING LISTED DOUBLE WALL CONNECTOR - RESIDENTIAL CLOSE CLEARANCE		
SIDEWALL	A 381 mm / 15 in	D 686 mm / 27 in	SIDEWALL	A 381 mm / 15 in	D 686 mm / 27 in
BACKWALL	B 203 mm / 8 in	E 368 mm / 14.5 in	BACKWALL	B 254 mm / 10 in	E 419 mm / 16.5 in
CORNER	C 152 mm / 6 in	F 457 mm / 18 in	CORNER	C 152 mm / 6 in	F 457 mm / 18 in
INSTALLATION USING LISTED DOUBLE WALL CONNECTOR - ALCOVE			INSTALLATION USING LISTED DOUBLE WALL CONNECTOR - ALCOVE		
SIDEWALL	G 380 mm / 15 in	I 686 mm / 27 in	SIDEWALL	G 380 mm / 15 in	I 686 mm / 27 in
BACKWALL	H 203 mm / 8 in	J 368 mm / 14.5 in	BACKWALL	H 254 mm / 10 in	J 419 mm / 16.5 in

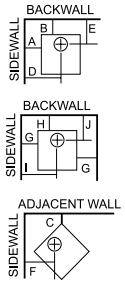

FLOOR PROTECTION*
PROTECTION DE PLANCHER*

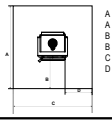

A 1245 mm / 49 in (Canada)
A 1194mm / 47 in (USA)
B 457 mm / 18 in
B 406 mm / 16 in
C 1026 mm / 40-3/8 in
D 203 mm / 8 in

To be installed as a freestanding room heater with the clearances in the manufacturer's installation instructions. Not to be installed in any fireplace. À installer en tant que chauffage autoportant avec les dégagements indiqués dans les directives d'installation du fabricant. Ne pas installer dans un foyer.

* In Canada, floor protection must extend 18" (457mm) to the front (16"/406mm for USA) and 8" (203mm) to each side and back of the stove. (For Canada and USA)
* Au Canada, la protection de plancher doit dépasser de 18 po (457 mm) à l'avant (16 po/406 mm aux États-Unis) et de 8 po (203 mm) de chaque côté du poêle et derrière le poêle (pour le Canada et les États-Unis).

CAUTION

HOT WHILE IN OPERATION DO NOT TOUCH. KEEP CHILDREN, CLOTHING AND FURNITURE AWAY. CONTACT MAY CAUSE SKIN BURNS. READ NAMEPLATE AND INSTRUCTIONS.

ATTENTION

CHAUD DURANT LE FONCTIONNEMENT. NE TOUCHEZ PAS. ÉLOIGNEZ LES ENFANTS, LES VÊTEMENTS ET LES MEUBLES. LE CONTACT PEUT CAUSER DES BRÛLURES. LISEZ LA PLAQUE SIGNALÉTIQUE ET LES INSTRUCTIONS

MADE IN CANADA / FABRIQUÉ AU CANADA

920-743

DATE OF MANUFACTURE
JAN FEB MAR APR MAY JUN JUL AUG SEPT OCT NOV DEC
2024 2025 2026 2027 2028

Unit Dimensions With Bottom Heat Shield & Cast Legs

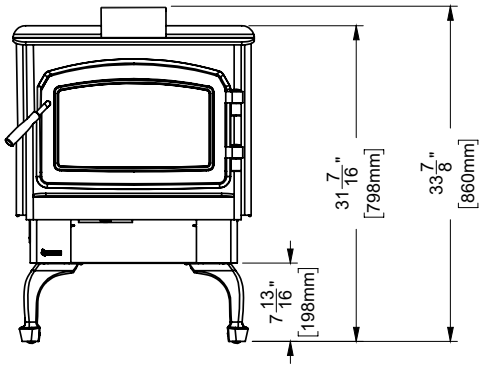

Unit Dimensions With Pedestal/Wood Stacker

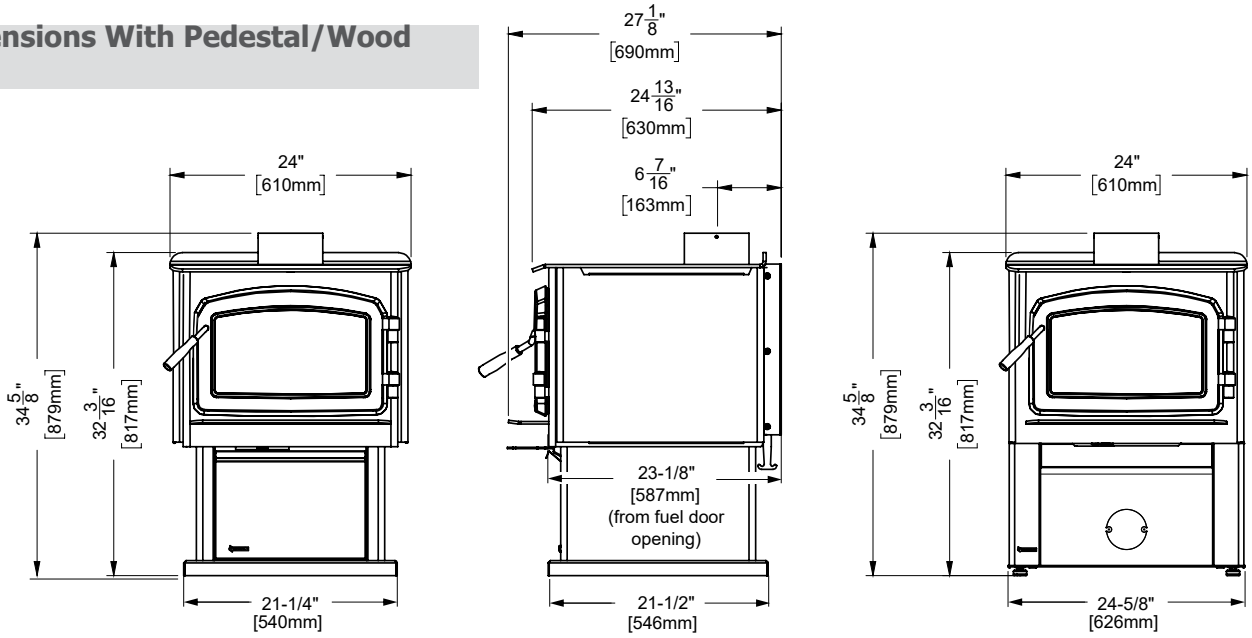

Outside Air Dimensions

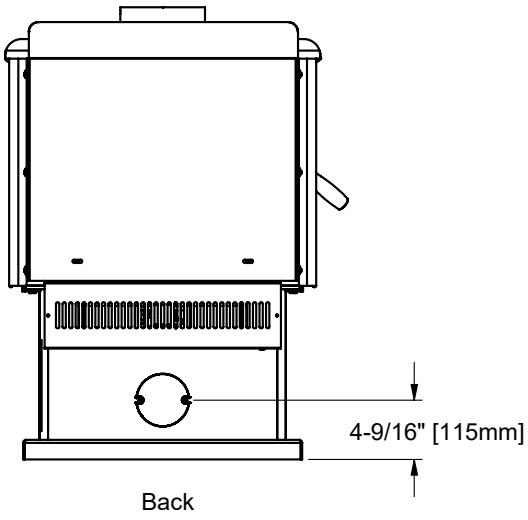

With Pedestal

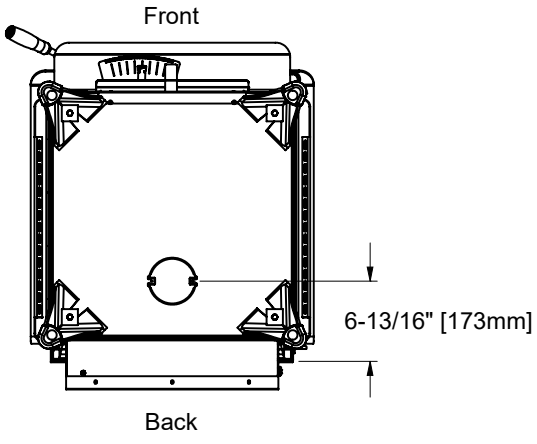

With Bottom Heat Shield & Legs

installation

1. Please read this entire manual before you install and use your new woodstove. Failure to follow instructions may result in property damage, bodily injury or even death. Be aware that local Codes and Regulations may override some items in this manual. Check with your local inspector.

WARNING: DO NOT INSTALL THE FREESTANDING WOODSTOVE IN ANY FIREPLACE.

2. Select a position for your Regency Stove. Consult the minimum clearance chart for your model and set the stove in place. For installation use listed double wall connector systems only.
3. To insure vertical alignment, suspend a plumb bob from the ceiling over the exact center of your stove flue and mark a spot on the ceiling to indicate the center of the chimney.
4. Check that the area above the ceiling is clear for cutting. Re-confirm the clearance from the stove to combustibles to ensure that they are within the prescribed limits.
5. This woodstove must be connected to a UL 103 HT (ULC S629) listed chimney or a code approved masonry chimney with a flue liner.

   Space heater is to be connected to a factory built chimney conforming to CAN/ULC-5629 standard for 650C factory built chimneys. The chimney requirement is 6", refer to appropriate sections in this manual for specifics.
6. Install chimney according to chimney manufacturers instructions. The performance of your woodstove is governed to a very large part by the chimney system. Too short a chimney can cause difficult start-up, dirty glass, back smoking when door is open, and even reduced heat output.
   Too tall a chimney may prompt excessive draft which can result in very short burn times and excessive heat output. The use of an inexpensive flue pipe damper may be helpful in reducing excessive draft.

WHEN THIS ROOM HEATER IS NOT PROPERLY INSTALLED, A HOUSE FIRE MAY RESULT. TO REDUCE THE RISK OF FIRE, FOLLOW THE INSTALLATION INSTRUCTIONS. CONTACT LOCAL BUILDING OR FIRE OFFICIALS ABOUT RESTRICTIONS AND INSTALLATION INSPECTION REQUIREMENTS IN YOUR AREA.

CAUTION: The chimney should be the same size as the 6" flue outlet on the stove. The chimney must be listed as suitable for use with solid fuels. For other types of chimneys check with your local building code officials. Do not confuse a chimney with a type "B" Venting System used for gas appliances as suitable for a wood burning appliance. For Mobile Home installations refer to that section within this manual.

7. Mark the location of the pedestal base or legs on the floor, then move the stove aside and mark the position of the floor protector.
8. The floor protector must be of non-combustible material and must extend 16" (406mm) (USA) in front of the door opening and 8" (203mm) to the sides and rear of the unit. Some areas may require a larger size floor protector. See your local inspector. For outside air installation refer to Mobile Home installation instructions within this manual.

NOTE: In Canada, floor protection must extend 18" (450mm) to the front and 8" (203mm) to each side and back of the stove.

9. When the floor protection is complete, position the stove with the flue collar centered under the installed chimney.
10. In areas with frequent seismic activity, Regency recommends that your unit is secured to the floor by using the bolt down holes inside the pedestal (the same ones used in Mobile Home installations).

NOTE: In Canada installation shall be in accordance with CSA B365, Installation Code for Solid-Fuel-Burning Appliances and Equipment, building codes, and standards that apply to the structure where the space heater is installed.

11. For residential installations 6" (single wall OK) double wall chimney, the chimney connector must be at least 24 gauge steel. Do not use galvanized pipe. For Mobile Home installation refer to the Mobile Home installation instructions within this manual.
12. **DO NOT CONNECT THIS UNIT TO A CHIMNEY SERVING ANOTHER APPLIANCE.**
13. A chimney connector cannot pass through an attic or roof space, closet or similar concealed space, or a floor, ceiling, wall or partition of combustible construction. In Canada, if passage through a wall, or partition of combustible construction is desired, the installation shall conform to CAN/CSA-B365, Installation Code for Solid-Fuel-Burning Appliances and Equipment.
14. Your Regency Woodstove is not to be connected to any air distribution duct.
15. To be installed as a freestanding space heater with the clearances in the manufacturer's installation instructions. "Not to be installed in any fireplace."
16. Room heaters intended for use in mobile homes are to be installed in accordance with the Mobile Home Construction and Safety Standards published by the Department of Housing and Urban Development (HUD).
17. **IMPORTANT:** If using the optional wood stacker, the wood stored below the appliance cannot extend beyond the front of the wood stacker opening.

CAUTION:
Do not alter or makeshift chimney or install. Install as per Manual.

IMPORTANT:
During the first few fires, a white film may develop on the glass front as part of the curing process. **The glass should be cleaned** or the film will bake on and become very difficult to remove. Use a non-abrasive cleaner and **NEVER** clean the glass while it is hot.

NOTE: In Canada, chimney must be removed for transportation of a transportable building.

IMPORTANT:
Smoke and CO Detectors:
Make sure your home has a working smoke and CO detector, especially near any bedrooms. We recommend having a smoke and CO detector in the same room as the wood appliance for additional safety. Location of both detectors should be chosen wisely to avoid false alarms when reloading the appliance.

Fire Extinguisher:
A fire extinguisher should be installed in the home. The location of the fire extinguisher should be known by all family members.

Modular Installation Options WARNING: ONLY USE SPECIFIED COMPONENTS. The following items are required when assembling your Regency Stove. F2450-2 unit - the Rear Heat Deflector is supplied with the stove, but if you choose not to use it you must use the Airmate instead.	
Modular Part	See the Minimum Clearance to Combustible Materials chart in the Installation section of this manual
F2450-2 Airmate OR Rear Heat Deflector	Convection heat with Airmate vs. Radiant Heat with Rear Heat Deflector. The Airmate pushes heat forward out into the room, the Rear Heat Deflector deflects the heat upward. Refer to the Installation sections within this manual.
OPTIONS :	
Blower/ Fan	Adding the blower will increase the area heated by the stove, it can move warm air beyond the room where the stove
Ash Drawer Kit	Adding the Ash Drawer Kit makes cleaning ashes out of the stove easier and cleaner (refer to Bottom Shield Ash Drawer Kit, Installation section)
Outside Air Kit	Allows outside combustion air to enter firebox
Bottom heat shield + legs*	Used instead of pedestal or wood stacker
Pedestal*	Used instead of heat shield and legs or wood stacker
Wood Stacker*	Used instead of pedestal or heat shield and legs. Note: The Ash Drawer option cannot be used in conjunction with the wood stacker.
Cast Door*	Choose between black door or black with nickel accent door

*Must choose one of the options. Cannot be installer/operated without a cast door, pedestal, wood stacker and/or bottom heat shield and legs.

Wood Stacker Assembly Installation

1. For easier assembly, tip the stove on its back (onto a soft surface to prevent scratching).

2. **Important: If installing outside air to the appliance, remove the 4" (102 mm) blanking plate. See below. This must be removed to allow the outside air kit to be installed.**

3. Using the 4 supplied 5/16" bolts in the underside of the stove, insert the bolts loosely onto the threads located at all 4 corners of the base of the unit. Align the holes in the corners of the Wood Stacker top with the corresponding bolts in the base of the stove. Tighten each bolt from inside the Wood Stacker.

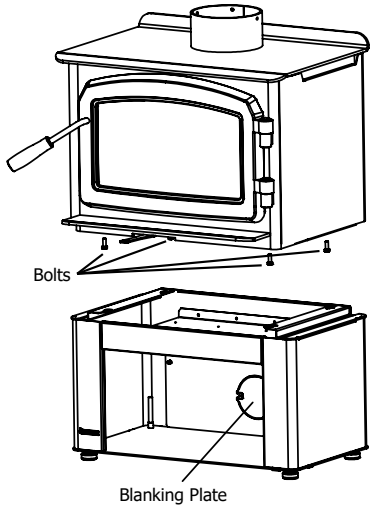

4. Affix the tool holder to either the right or left side of the appliance by loosening the screw and hooking the tool holder onto the screw and re-tighten.
   Note : The tool holder will be with the manual package inside of the unit.

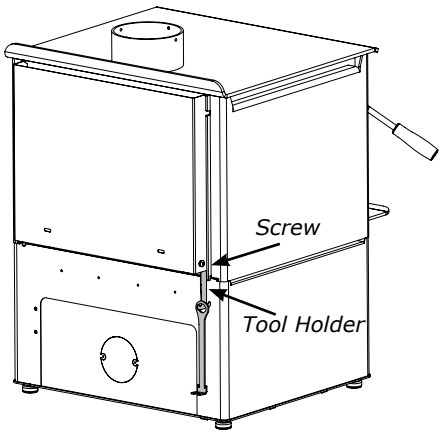

Airmate Assembly

1. The Airmate sits on top of the stove with the slots in the sides fitting over the curved deflector on the rear stove top. See diagram 1. Discard the Rear Heat Deflector that is supplied with the unit, it is not required if the Airmate is installed.

2. Center the Airmate and push it forward to the front of the stove. The back of the Airmate should be level with the back and sides of the rear heat shield. See Diagrams 2 & 3.

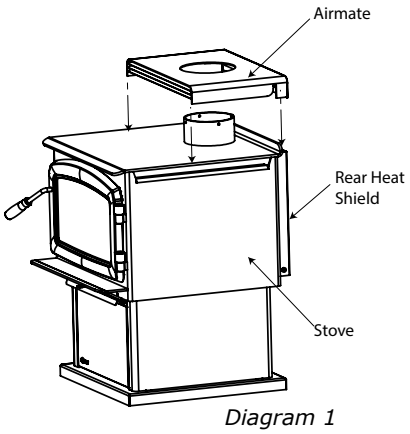

Diagram 1

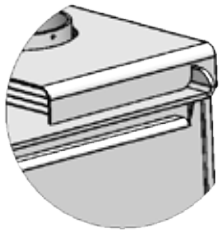

Diagram 2

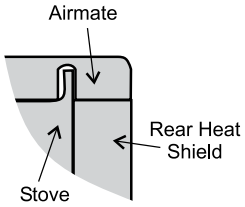

Diagram 3

Rear Heat Deflector Assembly

The rear heat deflector is supplied with the stove and must be installed unless the optional Airmate has been selected. It stops the heat radiated from the flue collar from overheating the rear wall. The rear heat deflector is installed on top of the rear heat shield, as shown in Diagram 4.

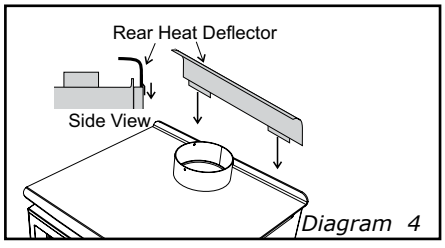

Diagram 4

Pedestal Assembly Installation

1. For easier assembly, tip the stove on its back (onto a soft surface to prevent scratching) and remove the front cover.

   Hint: If you have chosen the Ash Drawer option, remove the ash dump cover plates before attaching the pedestal (refer to the Ash drawer Kit Installation section).

2. Important: Remove the blanking plate if:
   a) you are not installing outside combustion air or
   b) outside air is to be brought in from the rear of the stove (see below).

3. Using the 4 supplied 5/16" bolts in the underside of the stove, insert the bolts loosely onto the threads located at all 4 corners at the base of the unit. Align the holes in the corners of the pedestal top with the corresponding bolts in the base of the stove. Tighten each bolt from inside the pedestal.

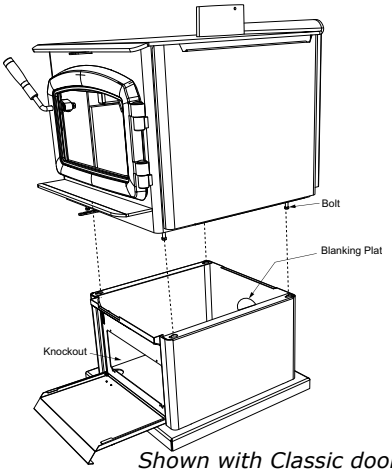

Shown with Classic door

Logo Installation

1. Push the Regency logo into the two holes in the front bottom left corner of the pedestal cover plate.

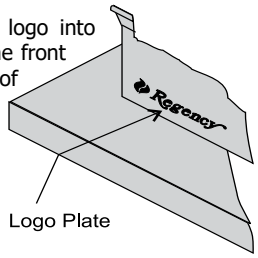

Note: Any paint touch up should be done prior to placing logo on pedestal.

2. If not using ash drawer, then the front cover must remain in place. If using ash drawer, then remove the front cover.

Bottom Heat Shield and Legs Installation

The instructions below apply to the painted cast leg and the nickel plated cast leg. It will be easier to attach the legs to the stove if the stove is tipped on its back (preferably on a soft surface to prevent scratching). **Ensure to be extremely careful when tipping stove.**

1) Remove the 4 bolts from underside of the base of the stove and discard. Also remove cover plate (if installed) and put to the side.

2) Line up the heat shield with the bottom of the unit.

3) Start threading the bolt and metal washer (supplied with the bottom shield) for about 1/4 of the way through the leg with the washers being underneath the legs. Ensure that the legs are properly aligned with heat shield and tighten the bolts.

4) Level the stove by adjusting the levelling bolts in the bottom of each leg.

5) Reinstall cover plate if the optional ash drawer is not being used.

6) Install logo plate onto heat shield by placing in 2 holes as shown in diagram.

The 4" knockout must be removed if using either room air and or outside air for combustion. Discard the knockout after removing.

If you are installing outside combustion air, bend the tabs out 90 degrees (diagram 4). Pipe fresh air into the bottom shield by using a minimum 4" duct pipe with a mesh grill at the outside termination. Attach the pipe to the 2 tabs with screws.

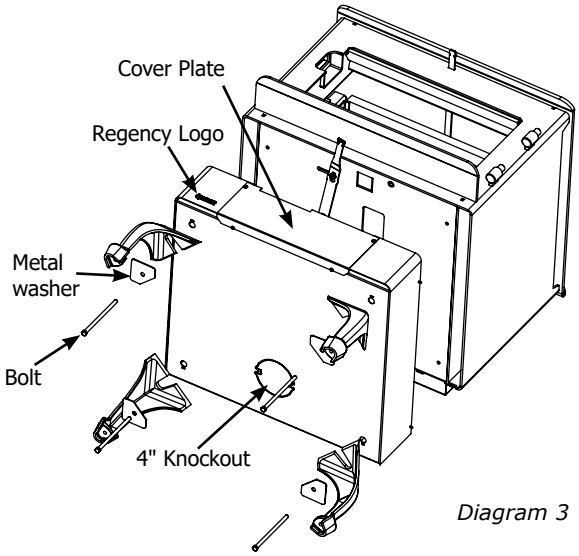

Diagram 3

7) Affix the tool holder to either the right or left side of the appliance by loosening the screw and hooking the tool holder onto the screw and retighten as shown below.
Note: The tool holder will be with the manual package inside of the unit.

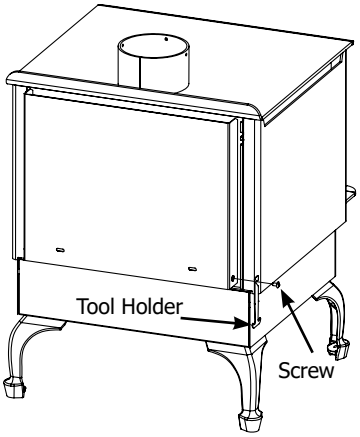

Diagram 1

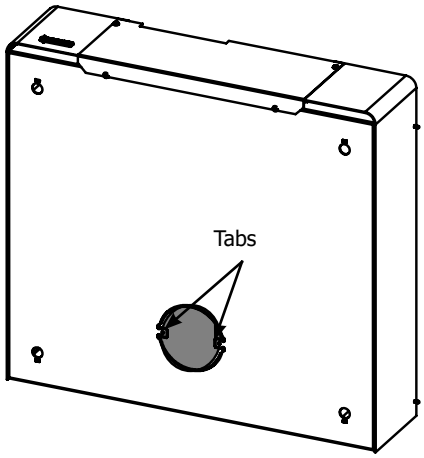

Diagram 4

8) Hook control tool onto tool holder as shown below.
Note : The control tool will be with the manual package inside of the unit.

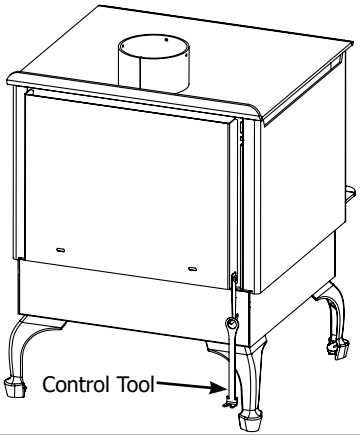

Diagram 2

Room Air - Important

For installation using room air for combustion, remove knockout from the pedestal, and/or from the bottom if using a heat shield.

Mobile home installations require the use of outside air.

On pedestal units there are two locations where outside air may be adapted to the unit. If using the bottom of the pedestal, do not remove knockout from the rear of the pedestal. Only remove rear knockout if outside air will be brought in from the rear.

On leg units outside air can only be brought in from the bottom of the heat shield.

Note: Once the knockout is removed there are two tabs remaining. Bend both tabs out for ease of installation when attaching outside air.

Minimum Clearance To Combustible Materials

Please read the section below carefully as clearances depend on whether the airmate or the rear heat deflector is installed on the stove.

Measurements "From Unit" are from the side heat shields of the stove to a side wall or to a corner, and from the rear heat shield to a back wall.

Clearances may only be reduced by means approved by the regulatory authority.
Minimum ceiling height - 83" (2108 mm) (Measured from base of appliance)

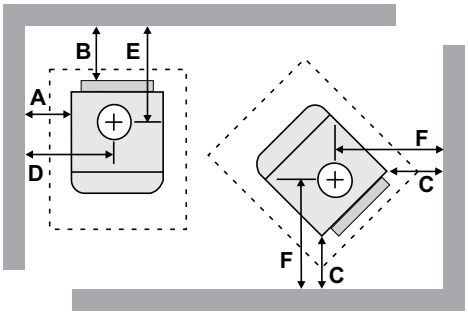

NOTE: This clearance is also required for air space between the appliance and wall/ceiling.

NOTE: Be aware that local Codes and Regulations may override some clearances listed in this manual. Check with your local inspector.

Residential Installation "C" Vent (Single Wall)						
Unit	**From Unit**		**From Corner**		**From Flue Center-Line**	
	A	**B**	**C**	**D**	**E**	**F**
Medium F2450-2 with Airmate	16" (406mm)	9-1/2" (241mm)	8" (203mm)	28" (711mm)	16" (406mm)	20" (508mm)
with Rear Deflector	16" (406mm)	11-1/2" (292mm)	8" (203mm)	28" (711mm)	18" (457mm)	20" (508mm)
Residential Close Clearance (To be installed with required pipe components) When the stove is installed as a close clearance residential unit, a listed double wall connector is required from the stove collar to the ceiling level.						
Unit	**From Unit**		**From Corner**		**From Flue Center-Line**	
	A	**B**	**C**	**D**	**E**	**F**
Medium F2450-2 with Airmate	15" (381mm)	8" (203mm)	6" (152mm)	27" (686mm)	14-1/2"(368mm)	18" (457mm)
with Rear Deflector	15" (381mm)	10" (254mm)	6" (152mm)	27" (686mm)	16-1/2"(419mm)	18" (457mm)
Mobile Home Close Clearance (To be installed with required pipe components) "C" Vent single wall pipe is not approved for Mobile Home installations. (Refer to Mobile Home Instructions.)						
Unit	**From Unit**		**From Corner**		**From Flue Center-Line**	
	A	B	C	D	E	F
Medium F2450-2 with Airmate	15" (381mm)	8" (203mm)	6" (152mm)	27" (686mm)	14-1/2"(368mm)	18" (457mm)
with Rear Deflector	15" (381mm)	10" (254mm)	6" (152mm)	27" (686mm)	16-1/2"(419mm)	18" (457mm)

Minimum Alcove Clearance and Clearance to Combustible Materials

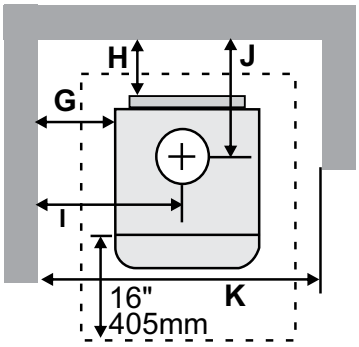

The Regency Freestanding models have been alcove approved and must be installed with a listed double wall connector to the ceiling level.

Note: Minimum alcove ceiling height - 83" (Measured from base of appliance)
Maximum depth of alcove - 48"

NOTE: This clearance is also required for air space between the appliance and wall/ceiling. Where the appliance is installed less than 8" from a rear wall, the ember pad only needs to extend to the base of the wall based on the clearances noted in this manual.

NOTE: The measurements for floor protection for front are taken from the fuel door opening and from the side of the stove for side clearances.

Unit	From Unit		From Flue Center-Line		From Wall
	G	H	I	J	K
F2450-2 with Airmate	15" (381mm)	8" (203mm)	27" (686mm)	14-1/2" (368mm)	54" (1372mm)
with Rear Deflector	15" (381mm)	10" (254mm)	27" (686mm)	16-1/2" (419mm)	54" (1372mm)

Floor Protection (Ember Protection only required)

A combustible floor must be protected by a non-combustible material (like tile, concrete board, or certified to UL-1618 Type 1, or as defined by local codes). Type 1 Hearth Pads typically provide protection from embers only, but won't provide thermal protection from the heat of the appliance.

Canada: Beneath the heater and extending to at least 18" on the fuel loading side and at least 8" on the sides and back.

USA: Beneath the heater and extending to at least 16" beyond the fuel loading side and ash removal opening and at least 8" on the sides and back and under the chimney connector extending 2" beyond each side for horizontal applications.

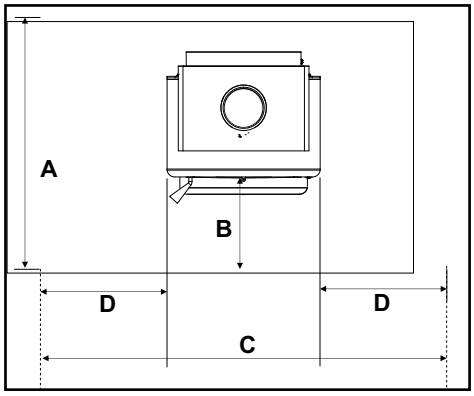

Note: The measurements for floor protection for front are taken from fuel door opening & sides/back are taken from the unit heat shield.When the appliance is installed less than 8" from a rear wall, the ember pad only needs to extend to the base of the wall based on the clearances noted in this manual.

Minimum Overall Depth (Y) of Floor Protector					
		Hearth Depth	Edge of Fuel Door Opening to Edge of Hearth	Hearth Width	Side of the Stove (Both Sides)
Unit		A	B	C	D
F2450-2	Canada	49" (1245mm)	18" (457mm)	40-3/8" (1026 mm)	8" (203mm)
	USA	47" (1194mm)	16" (406mm)	40-3/8" (1026 mm)	8" (203mm)

Minimum Overall Depth (Y) of Floor Protector					
Reference only when hearth pad is installed to rear wall at minimum pipe clearances.		**Hearth Depth**	**Edge of Fuel Door Opening to Edge of Hearth**	**Hearth Width**	**Side of the Stove (Both Sides)**
Residential Installation "C" Vent (Single Wall)					
Unit		**A**	**B**	**C**	**D**
F2450-2 with Airmate	Canada	50-1/2" (1283mm)	18" (457mm)	40-3/8" (1026 mm)	8" (203mm)
	USA	48-1/2" (1232mm)	16" (406mm)	40-3/8" (1026 mm)	8" (203mm)
F2450-2 with Rear Deflector	Canada	52-1/2" (1334mm)	18" (457mm)	40-3/8" (1026 mm)	8" (203mm)
	USA	50-1/2" (1283mm)	16" (406mm)	40-3/8" (1026 mm)	8" (203mm)
Residential Close Clearance (To be installed with required pipe components)					
Unit		**A**	**B**	**C**	**D**
F2450-2 with Airmate	Canada	48" (1219mm)	18" (457mm)	40-3/8" (1026 mm)	8" (203mm)
	USA	46" (1168mm)	16" (406mm)	40-3/8" (1026 mm)	8" (203mm)
F2450-2 with Rear Deflector	Canada	50" (1270mm)	18" (457mm)	40-3/8" (1026 mm)	8" (203mm)
	USA	48" (1219mm)	16" (406mm)	40-3/8" (1026 mm)	8" (203mm)

Floor Protection (Corner Installation)

A combustible floor must be protected by non-combustible material (like tile, concrete board, or certified to UL-1618 or as defined by local codes) extending beneath the heater and a minimum of 8" (203 mm) from each side and minimum 16" (406 mm) from the front face of the stove and minimum 8" (203 mm) (or the rear clearance to combustibles whichever is smaller) from the rear of the stove.

When installed with horizontal venting, non-combustible floor protection must beneath the flue pipe and extend 2" (51mm) beyond each side.

Minimum Overall Width (X) of Floor Protector for all installations:

Stove F2450-2 40-3/8" (1026 mm)

Note: Side & Rear measurements are taken from unit heat shield.
*Front measurement is taken from fuel door opening.

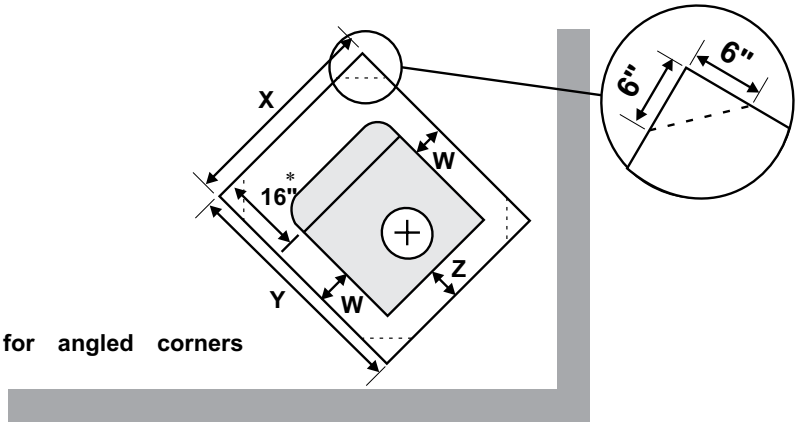

for angled corners

NOTE: In Canada, floor protection must extend 18" (450mm) to the front and 8" (203mm) to back of the stove.

Minimum Overall Depth (Y) of Floor Protector			
Unit	**Hearth Depth**	**Rear of Stove**	**Side of the Stove (Both Sides)**
	Y	**Z**	**W**
F2450-2	Canada - 49" (1245 mm) USA - 47" (1194 mm)	**8" (203 mm)	8" (203 mm)

Minimum Overall Depth (Y) of Floor Protector - Corner Hearth Reference only when hearth pad is installed to rear wall at minimum pipe clearances.				
	Hearth Depth			
F2450-2	**L**	**M**	**N**	**O**
Residential Installation "C" Vent (Single Wall)				
Canada	40-3/8" (1026 mm)	63-7/16" (1611 mm)	54-7/8" (1394 mm)	26-5/16" (669 mm)
USA	40-3/8" (1026 mm)	61-7/16" (1560 mm)	53-7/16" (1358 mm)	24-15/16" (633 mm)
Residential Close Clearance (To be installed with required pipe components)				
Canada	40-3/8" (1026 mm)	60-9/16" (1539 mm)	52-7/8" (1343 mm)	24-5/16" (618 mm)
USA	40-3/8" (1026 mm)	58-9/16" (1488 mm)	51-7/16" (1307 mm)	22-15/16" (582 mm)

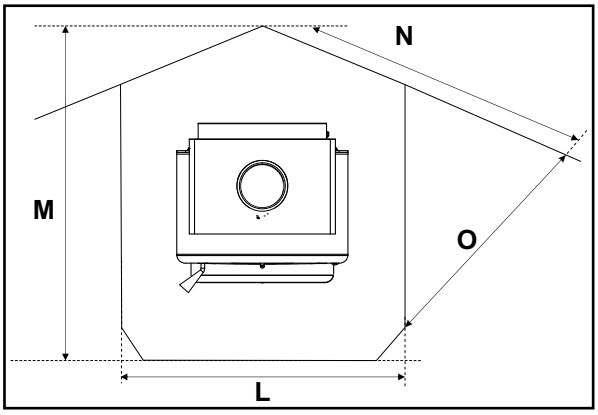

This stove may be connected to a lined masonry chimney or a listed factory built chimney suitable for use with solid fuels and conforming to ULC629 in Canada or UL-103HT in the USA. Do not connect it to a chimney serving another appliance. To do so will affect the safe operation of both appliances, and will void the stove warranty. You must comply with the local authority having jurisdiction and/or in Canada, CSA installation standard B365-M87.

The chimney connector must be 6" diameter, 24 MSG Black/Blue steel. Do not use aluminum or galvanized steel, they cannot properly withstand the extreme temperatures of a wood fire. The chimney connector between the stove and the chimney should be as short and direct as possible.

The chimney connector must be attached to either an approved masonry chimney or one of the listed factory built chimneys suitable for use with solid wood fuel. All joints must be tight and fastened with sheet metal screws.

⚠ WARNING

THE CHIMNEY CONNECTOR IS TO BE USED ONLY WITHIN THE ROOM, BETWEEN THE STOVE AND CEILING/ WALL. NEVER USE A CHIMNEY CONNECTOR TO PASS THROUGH AN ATTIC OR ROOF SPACE, CLOSET OR SIMILAR CONCEALED SPACE, OR A FLOOR, OR CEILING. AN EFFECTIVE VAPOR BARRIER MUST BE MAINTAINED AT THE LOCATION WHERE THE CHIMNEY OR COMPONENT PENETRATES TO THE EXTERIOR OF THE STRUCTURE. ALWAYS MAINTAIN THE MINIMUM CLEARANCES TO COMBUSTIBLES AS REQUIRED BY THE APPLICABLE BUILDING CODES.

Step-By-Step Chimney And Connector Installation

Notes: These are a generic set of chimney installation instructions. Always follow the manufacturers own instructions explicitly. Check the Minimum Recommended Flue Heights section (Table 1).

Do not install the chimney directly at the outlet of the appliance. A chimney connector (flue pipe) is required unless the appliance is specifically approved for that type of installation.

1. With your location already established, cut and frame the roof hole. It is recommended that no ceiling support member be cut for chimney and support box installation. If it is necessary to cut them, the members must be made structurally sound.
2. Install radiant shield and support from above.
3. Stack the insulated pipe onto your finish support to a minimum height of 3 feet above the roof penetration, or 2 feet above any point within 10 feet measured horizontally. There must be at least 3 feet of chimney above the roof level.

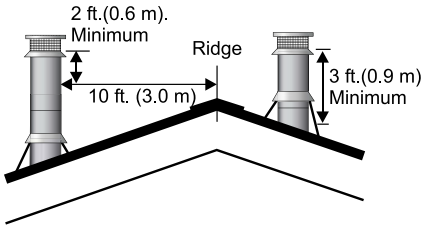

Note: Increasing the chimney height above this minimum level will sometimes help your unit to "breathe" better by allowing a greater draft to be created. This greater draft can decrease problems such as, difficult start-ups, back-smoking when door is open, and dirty glass. It might be sufficient to initially try with the minimum required height, and then if problems do arise add additional height at a later date.

4. Slide the roof flashing over your chimney and seal the flashing to the roof with roofing compound. Secure the flashing to your roof with nails or screws.
5. Place the storm collar over the flashing, sealing the joints with a silicone caulking.
6. Fasten the raincap with spark screens (if required) to the top of your chimney.
7. To complete your chimney installation, install the double wall connector pipe from the stove's flue collar to the chimney support device.
8. If you are using a horizontal connector, the chimney connector should be as high as possible while still maintaining the 18" (457mm) minimum distance from the horizontal connector to the ceiling.

NOTE: Residential Close Clearance and Alcove installations require a listed double wall connector from the stove collar to the ceiling level.

The diagrams below illustrate one way to install your unit into a standard ceiling or with a horizontal connector. Check with your dealer or installer for information on other options available to you.

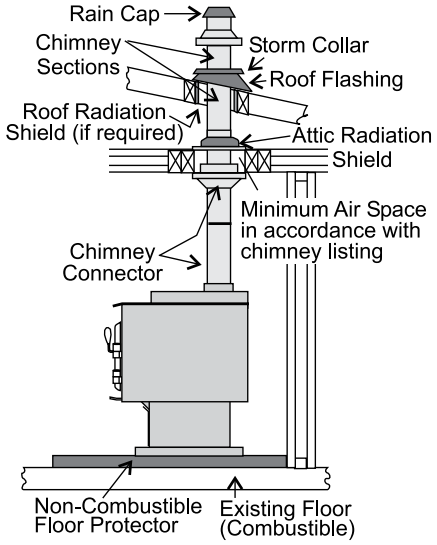

Standard Ceiling Installation

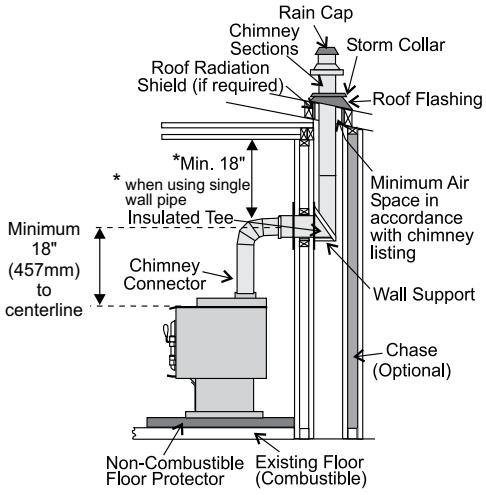

Horizontal Installation

Masonry Chimney

Ensure that a masonry chimney meets the minimum standards of the National Fire Protection Association (NFPA) by having it inspected by a professional. Make sure there are no cracks, loose mortar or other signs of deterioration and blockage. Have the chimney cleaned before the stove is installed and operated. When connecting the stove through a combustible wall to a masonry chimney, special methods are needed.

Ensure that an effective vapour barrier at the location where the chimney or other component penetrates to the exterior of the structure.

When referencing installation or connection to masonry fireplaces or chimneys, the masonry construction must or shall be code complying.

This unit is designed to use either a 5.5" (140mm) or 6" (152mm) flue liner only in the confines of the masonry chimney.

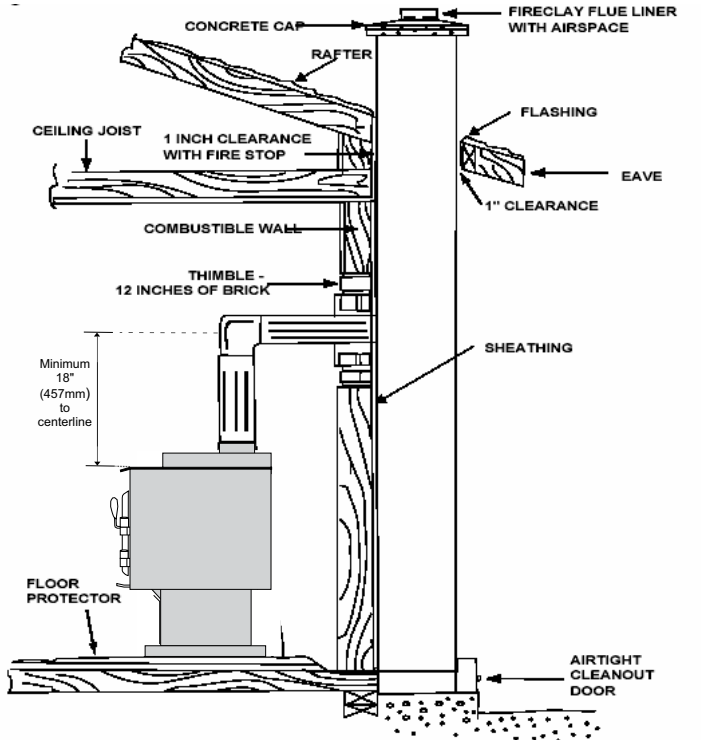

Masonry Fireplace

There are listed kits available to connect a stove to a masonry fireplace. The kit is an adapter that is installed at the location of the fireplace damper. The existing damper may have to be removed to allow installation.

Ensure that an effective vapour barrier at the location where the chimney or other component penetrates to the exterior of the structure.

This unit is designed to use either a 5.5" (140mm) or 6" (152mm) flue liner only in the confines of the masonry chimney as shown.

When referencing installation or connection to masonry fireplaces or chimneys, the masonry construction must or shall be code complying.

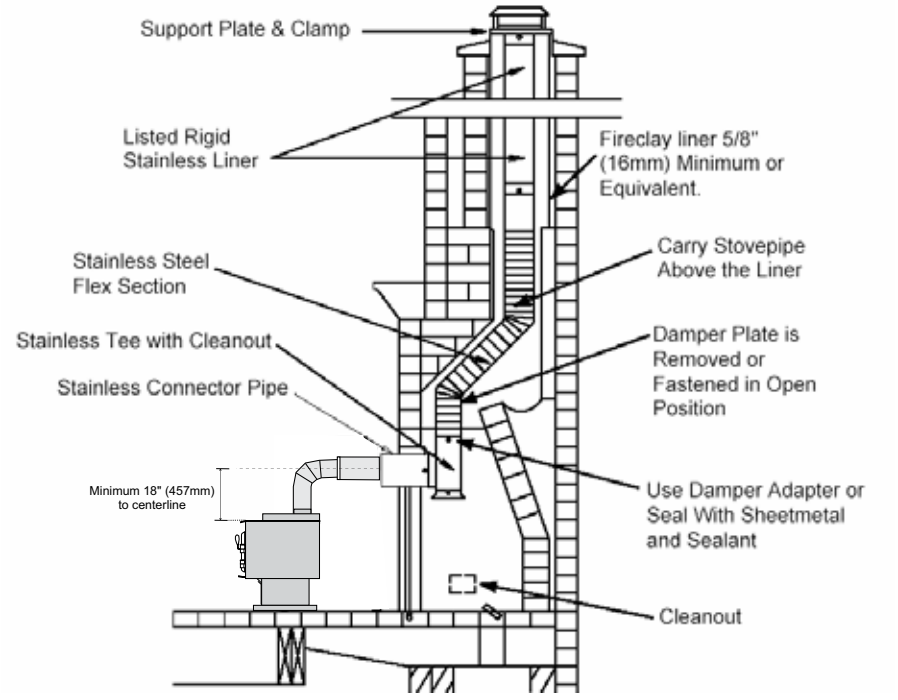

Factory Built Chimney

When a metal prefabricated chimney is used, the manufacturer's installation instructions must be followed. You must also purchase and install the ceiling support package or wall pass-through and "T" section package, firestops (where needed), insulation shield, roof flashing, chimney cap, etc. Maintain proper clearance to the structure as recommended by the manufacturer. The chimney must be the required height above the roof or other obstructions for safety and proper draft operation. The space heater is to be connected to a factory-built chimney conforming to CAN/ULC-S629, Standard for 650^{0}C Factory-Built Chimneys.

Combustible Wall Chimney Connector Pass-throughs

Method A: 12" (304.8 mm) Clearance to Combustible Wall Member:

Using a minimum thickness 3.5" (89 mm) brick and a 5/8" (15.9 mm) minimum wall thickness clay liner, construct a wall pass-through. The clay liner must conform to ASTM C315 (Standard Specification for Clay Fire Linings) or its equivalent. Keep a minimum of 12" (304.8 mm) of brick masonry between the clay liner and wall combustibles. The clay liner shall run from the brick masonry outer surface to the inner surface of the chimney flue liner but not past the inner surface. Firmly grout or cement the clay liner in place to the chimney flue liner.

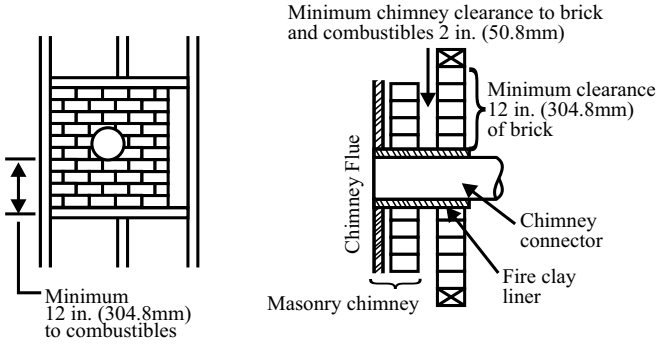

Method B: 9" (228.6 mm) Clearance to Combustible Wall Member:

Using a 6" (152.4 mm) inside diameter, listed, factory-built Solid-Pak chimney section with insulation of 1" (25.4 mm) or more, build a wall pass-through with a minimum 9" (228.6 mm) air space between the outer wall of the chimney length and wall combustibles. Use sheet metal supports fastened securely to wall surfaces on all sides, to maintain the 9" (228.6 mm) air space. When fastening supports to chimney length, do not penetrate the chimney liner (the inside wall of the Solid-Pak chimney). The inner end of the Solid-Pak chimney section shall be flush with the inside of the masonry chimney flue, and sealed with a non-water soluble refractory cement. Use this cement to also seal to the brick masonry penetration.

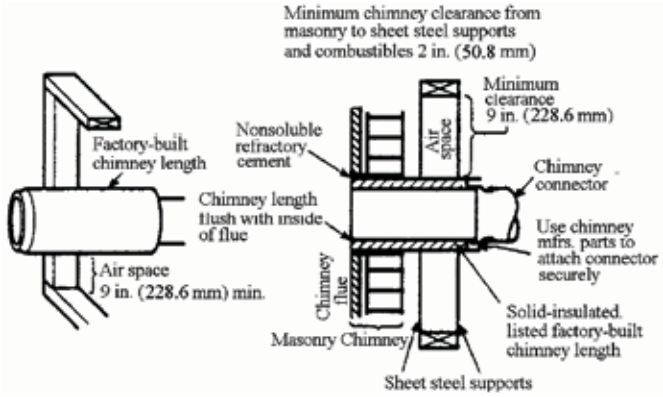

Method C: 6" (152.4 mm) Clearance to Combustible Wall Member:

Starting with a minimum 24 gage (.024" [.61 mm]) 6" (152.4 mm) metal chimney connector, and a minimum 24 gage ventilated wall thimble which has two air channels of 1" (25.4 mm) each, construct a wall pass-through. There shall be a minimum 6" (152.4 mm) separation area containing fiberglass insulation, from the outer surface of the wall thimble to wall combustibles. Support the wall thimble, and cover its opening with a 24-gage minimum sheet metal support. Maintain the 6" (152.4 mm) space. There should also be a support sized to fit and hold the metal chimney connector. See that the supports are fastened securely to wall surfaces on all sides. Make sure fasteners used to secure the metal chimney connector do not penetrate chimney flue liner.

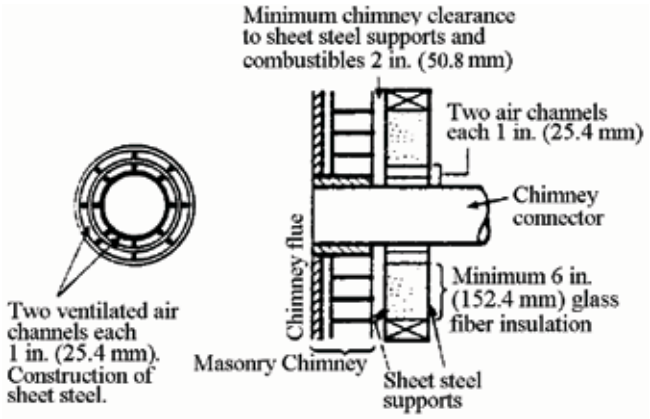

Method D: 2" (50.8 mm) Clearance to Combustible Wall Member:

Start with a solid-pak listed factory built chimney section at least 12" (304 mm) long, with insulation of 1" (25.4 mm) or more, and an inside diameter of 6" (2 inches [51 mm] larger than the 6" [152.4 mm] chimney connector). Use this as a pass-through for a minimum 24-gage single wall steel chimney connector. Keep solid-pak section concentric with and spaced 1" (25.4 mm) off the chimney connector by way of sheet metal support plates at both ends of chimney section. Cover opening with and support chimney section on both sides with 24 gage minimum sheet metal supports. See that the supports are fastened securely to wall surfaces on all sides. Make sure fasteners used to secure the metal chimney connector do not penetrate chimney flue liner.

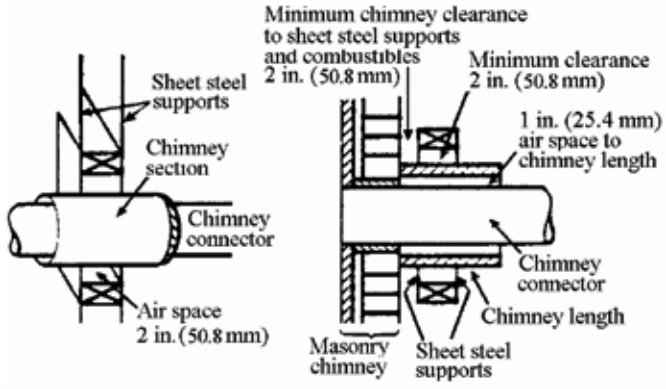

TABLE 1

MINIMUM RECOMMENDED FLUE HEIGHTS IN FEET
(Measured from the top of the unit)

ELEVATION (FT) ABOVE SEA LEVEL	# OF ELBOWS						
	0	2 x 15°	4 x 15°	2 x 30°	4 x 30°	2 x 45°	4 x 45°
0-1000	12.0	13.0	14.0	15.0	18.0	16.0	20.0
1000-2000	12.5	13.5	14.5	15.5	19.0	16.5	21.0
2000-3000	13.0	14.0	15.0	16.0	19.5	17.0	21.5
3000-4000	13.5	14.5	15.5	17.0	20.0	18.0	22.5
4000-5000	14.0	15.0	16.0	17.5	21.0	18.5	23.0
5000-6000	14.5	15.5	17.0	18.0	21.5	19.0	24.0
6000-7000	15.0	16.0	17.5	18.5	22.5	20.0	25.0
7000-8000	15.5	16.5	18.0	19.0	23.0	20.5	25.5
8000-9000	16.0	17.0	18.5	20.0	24.0	21.0	26.5
9000-10000	16.5	17.5	19.0	20.5	24.5	22.0	27.0

NOTE: No more than two offsets (four elbows) allowed. Two 45° elbows equal one 90° elbow.

Recommended Heights For Woodstove Flue

Simple rules on draft. See Table 1.

1) At sea level minimum height is 12' straight.

2) Add the following vertical height to compensate for:
45 deg. elbow = 1 ft.
90 deg. elbow = 2 ft.
"T" = 3 ft.
Each foot of horizontal run = 2 ft.

3) Add 4% overall for each 1000' above sea level.

Example: a)
1-1/2 ft. of horizontal run = 3 ft.
one "T" = 3 ft.
Total Addition (at sea level) = 6 ft.

Example: b)
One 90 deg. elbow = 2 ft.
2 ft. of horizontal run = 4 ft.
one "T" = 3 ft.
Total Addition (at sea level) = 9 ft.

		Recommended Flue Height
Elevation	**Example a)**	**Example b)**
0'	18'	21'
1000'	18.72'	21.84'
2000'	19.44'	22.68'
5000'	21.60'	25.20'
8000'	23.76'	27.72'

Draft is the force which moves air from the appliance up through the chimney. The amount of draft in your chimney depends on the length of the chimney, local geography, nearby obstructions and other factors. Too much draft may cause excessive temperatures in the appliance and may cause damage. An uncontrollable burn or excessive temperature indicates excessive draft. Inadequate draft may cause back puffing into the room and plugging of the chimney. Inadequate draft will cause the appliance to leak smoke into the room through appliance and chimney connector joints. Ensure the heater is installed in areas that are not too close to neighbors or in valleys that would cause unhealthy air quality or nuisance conditions.

WARNING:
DO NOT INSTALL IN SLEEPING ROOM

CAUTION: The structural integrity of the mobile home floor, wall and ceiling/roof must be maintained.

Mobile Home Installation (USA Only)

For USA Installations : see Outside Air Kit - Part # 846-502.

Once you have properly marked the position of your unit and the floor protection as outlined in the Residential Installation items #1 through #8, a supply of fresh air has to be supplied to your unit.

See Optional Outside Air Kit instructions in this manual.

Place your unit in position and secure it to the floor using two lag bolts 3/8" (10mm) x 3-1/2" (89mm) through the two holes inside the pedestal base. It is important to maintain the structural integrity of the Mobile Home floor, walls and roof when installing your unit.

For Mobile Home units installed in the U.S. the unit must be grounded using a #8 ground wire with approved termination and star washer.

CAUTION: At no time use unlabelled parts, or substitute parts made for another chimney system.

Install as per chimney manufacturer's installation instructions.

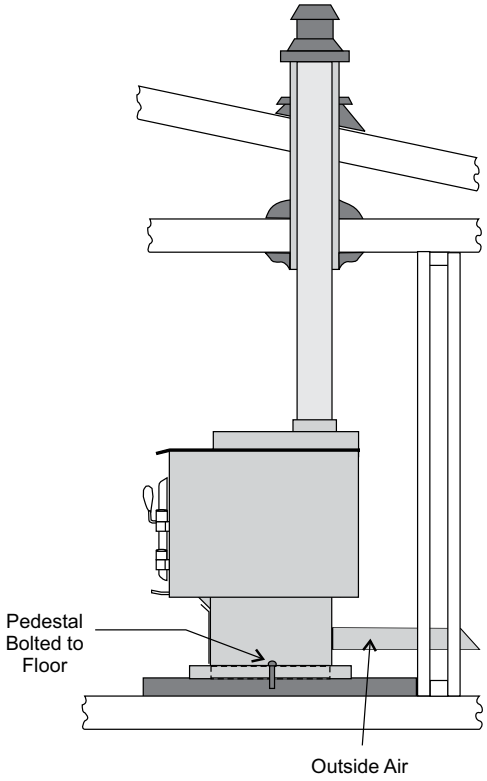

WARNING: Operate only with door fully closed - open feed door to feed fire only.

1. Identify the position of the outside air damper by the orientation of the metal handle that rests outside the galvanized pipe. The metal handle and the damper disc are in line with each other. This means that if the metal handle is in a horizontal position, the damper is flat and fully open.

2. Open the damper fully whenever you start a fire. This will allow the outside air to be drawn in the pedestal base eliminating any potential smoke escaping the stove and entering the room. (Negative air pressure)

In addition to standard installation instructions the following requirements are mandatory for installation in a mobile home.

1. **The stove must be permanently bolted to the floor of the Mobile Home using the floor screws provided.**

2. The stove must have a permanent outside air source for combustion.

3. The stove must be electrically grounded to the steel chassis of the Mobile Home.

4. A listed double-wall connector chimney system, roof thimble, spark arrestor and roof flashing kit suitable for use in Mobile Homes must be used.

5. If the chimney exits the Mobile Home at a location other than through the roof, and exits at a point 7ft. (2130mm) or less above the ground level on which the Mobile Home is positioned a guard or method of enclosing the chimney shall be fitted at the point of exit for a height up to 7ft. (2130mm).

6. The chimney shall be attached directly to the room heater and shall extend at least 3 ft. (914mm) above the part of the roof through which it passes. The top of the chimney should project at least 2ft. (610mm) above the highest elevation of any part of the Mobile Home within 10 ft. (3048mm) of the chimney.

7. The chimney system shall comply with Local Requirements.

8. Any openings in a chimney guard where required must not permit the entrance of 3/4" (19mm) diameter rod.

9. **CAUTION: THE STRUCTURAL INTEGRITY OF THE MOBILE HOME ROOF, FLOOR, WALLS AND CEILING MUST BE MAINTAINED.**

10. Check any other local building code as other local codes may apply.

11. **WARNING: DO NOT INSTALL IN A SLEEPING ROOM OF A MOBILE HOME.**

12. Use silicone to create an effective vapour barrier at the location where the chimney or other component penetrates to the exterior of the structure.

Optional Outside Air Kit

The Outside Air Kit is an option for Freestanding Stoves. Outside air for combustion can be brought in either through the bottom of the pedestal or through the rear plate of the pedestal.

For both bottom and rear outside air the Pedestal Cover Plate must be installed. Loosen the 4 screws on the rear of the pedestal and slide the cover plate over them. Slide the plate to the left to center it and tighten down the 4 screws.

Damper Installation

NOTE: The damper cannot be installed if attaching outside air to the bottom of the appliance.

Supplied damper allows the combustion air to be closed off when unit is not in operation.

Install the damper within the round pipe in an easily accessible location.

1. Drill a 5/16" hole in the desired location.
2. Insert damper with threaded section out.
3. Install damper handle and secure with wing nut.

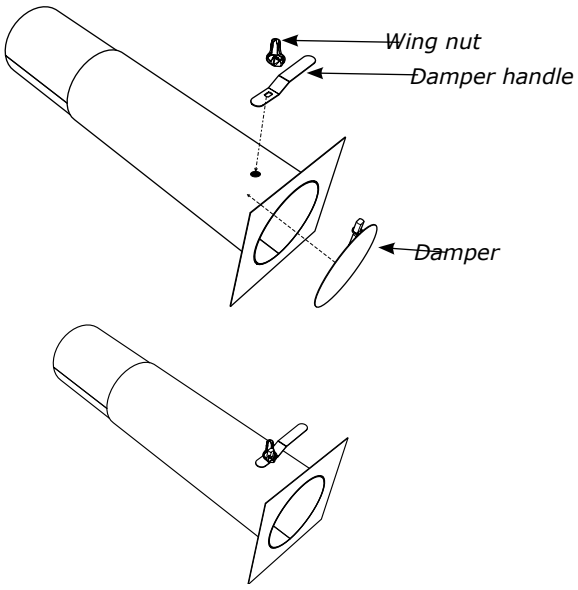

Completed Install

Outside Air Through Pedestal Rear

Remove the blanking plate from the rear of the pedestal and bend the two tabs out 90 degrees. Pipe fresh air into the pedestal area by using a minimum 4" metallic duct pipe with a mesh grill at the outside termination.

Fasten the pipe to the cover plate using the tabs and 2 screws.

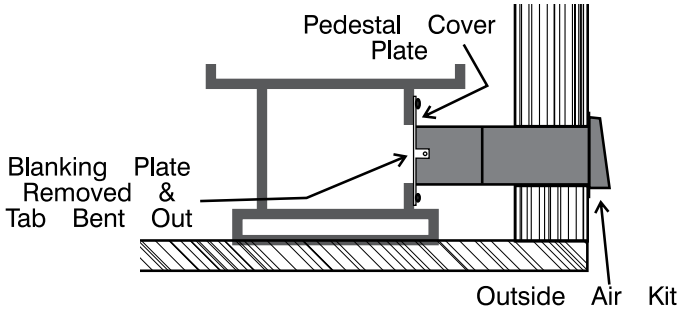

Side View

Outside Air Through Pedestal Bottom

Mark the position of your unit as outlined in the "General Information" and "Clearances to Combustibles" section of the manual. Pipe fresh air into the pedestal area by using a minimum 4" duct pipe with a mesh grill at the outside termination.

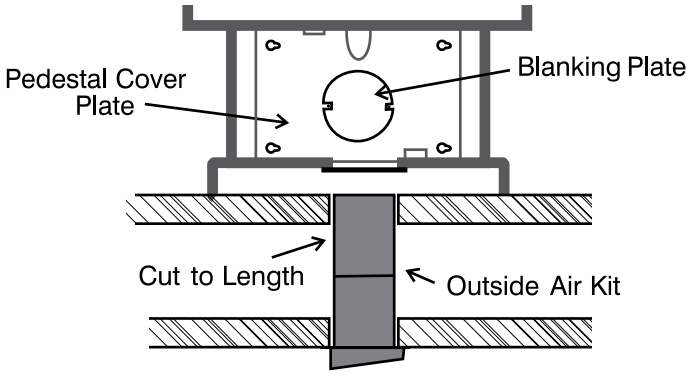

Rear View

Brick Installation

Firebrick is included to extend the life of your stove and radiate heat more evenly. Check to see that all firebricks are in their correct positions and have not become misaligned during shipping. Install all firebricks (if bricks were removed at install) per the diagram below and place in their correct positions.

Do not use a grate.

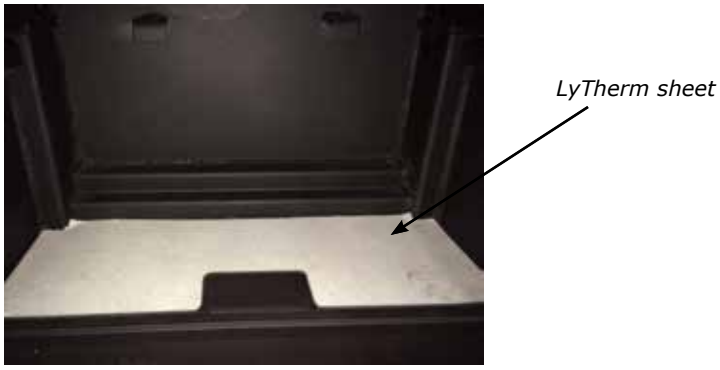

Order of firebrick install:

a) Rear Firebrick
b) Firebox floor - install brick over LyTherm Sheet
c) Right and left side Firebricks

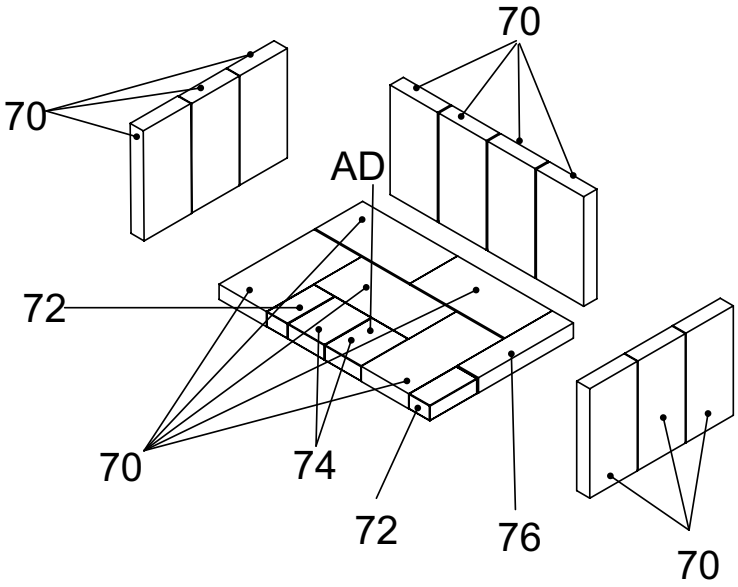

70)	Brick - Regular Full Size: 1-1/4" x 4-1/2" x 9"
72)	Brick Partial: 1-1/4" x 2" x 4-1/2"
74)	Brick Partial: 1-1/4" x 4-1/2" x 3-1/2"
76)	Brick Partial: 1-1/4" x 2" x 9"

NOTE: The "AD" brick in the drawings above is the brick covering the Ash Dump hole that is used when the Ash Drawer Kit is installed (refer to the Listed Components for Mobile Home Installation section).

Wood Handle & Door Assembly

1. In preparation of installing the door handle, the nuts, cam, washers and spacer must be removed as shown in Diagram 1.

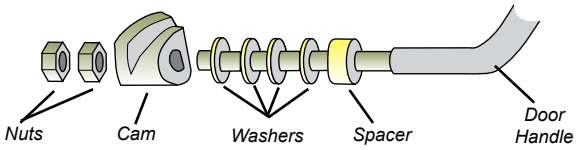

Diagram 1

LATCH ADJUSTMENT

The door latch may require adjustment as the door gasket material compresses over time. Removal of 1 or 2 washers will allow the latch to move closer to the door frame, causing a tighter seal. (Refer to Diagram 1)

2. Place the door onto the hinges and then place the door handle through the opening on the door, as shown in Diagram 2.

   Re-assemble and secure the door handle components in reverse order as removed in step 1, refer to Diagram 1.

3. Put the hinge cover caps on top of hinges to complete the door installation.

Note: The bottom of the door may scrape the ashlip. In this case place the spacers provided on the door hinges of the unit before placing the door.

4. Close door and ensure there is a tight seal. If door is too tight, a washer can be added. If the door is not creating a tight seal, a washer can be removed. Recheck door to ensure there is still a tight seal. Repeat steps if door seal is still not tight until a tight seal has been achieved. The handle should be approximately in the 8 o'clock position when door is fully closed.(Diagram 3)

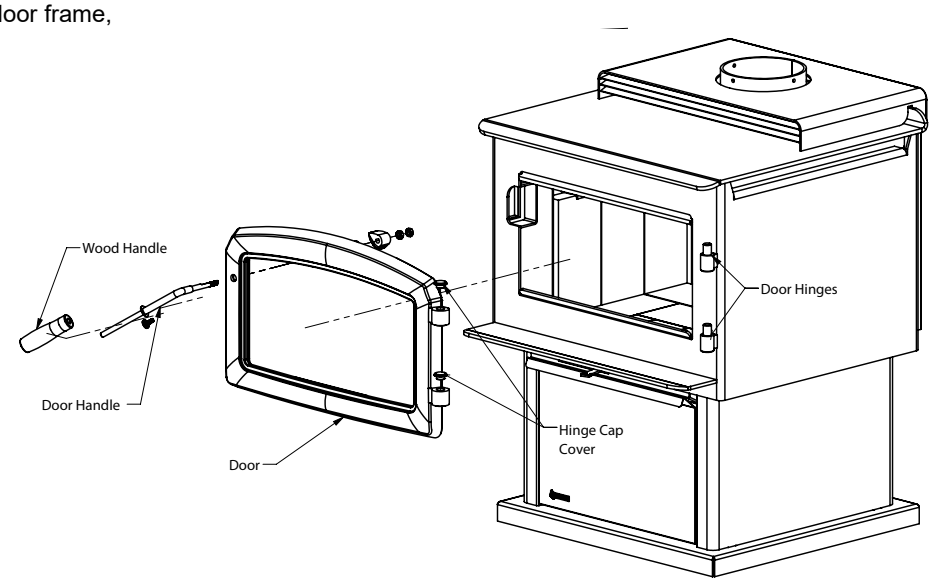

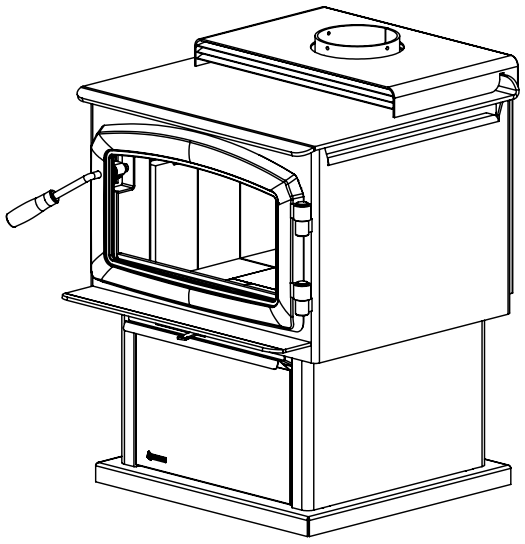

Flue Baffle Installation

The flue baffle system located in the upper area of the firebox is removable to make cleaning your chimney system easier. The baffles must be installed prior to your first fire. **Smoke spillage and draft problems may occur if the baffles are improperly positioned.** Check the position of the baffles on a regular basis as they can be dislodged if too much fuel is forced into the firebox.

IMPORTANT: The set of baffles will also have insulation glued to the top of them. When installing the baffle, the insulation must be on top as per below diagrams.

Freestanding Stove F2450-2

The unit arrives with the 2 baffles on the floor of the firebox.

1. Open the door and slide the baffle over the 4 air tubes towards the back of the unit with the baffle lip facing upward as shown below which will allow second baffle to lock into place for step 2.

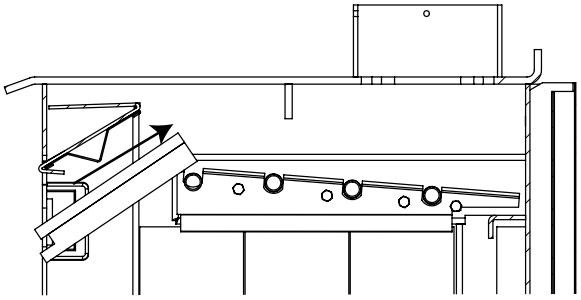

Side View

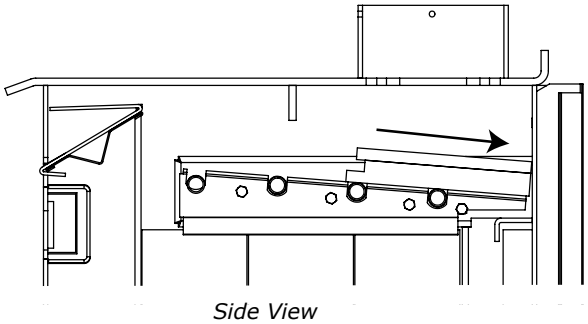

Side View

2. Tilt the second baffle on top of the 2 air tubes and lock it in place with the already placed baffle.

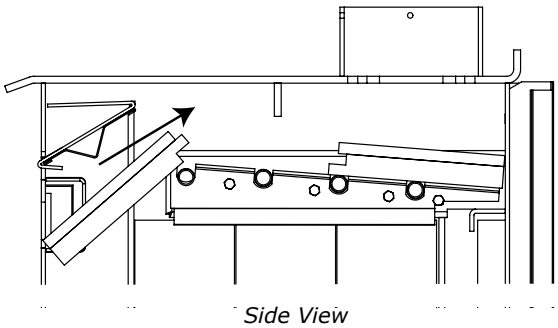

Side View

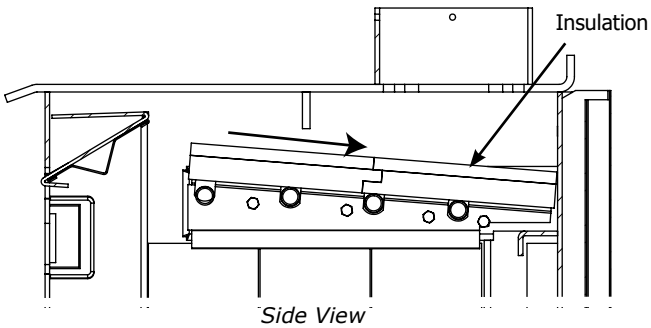

Side View

Important: Push both baffles so they are tight against the back wall.

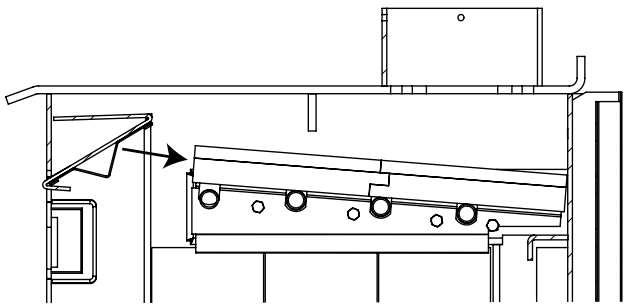

Side View

Fan Installation

1. Remove the two screws from the top of the fan housing.
2. Slide the fan up into the rear heat shield.
3. After aligning holes, secure the fan to the rear heat shield using the two screws removed earlier.

Note: The connection cord should not be in contact with any hot surfaces.

WARNING: FAN ASSEMBLY MUST BE DISCONNECTED FROM THE SOURCE OF ELECTRICAL SUPPLY BEFORE ATTEMPTING THE INSTALLATION.

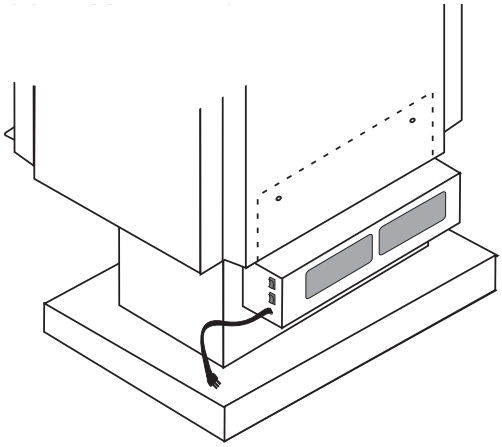

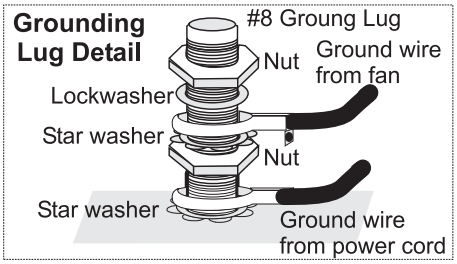

AUTOMATIC

To operate the fan automatically, push the bottom switch on the side of the fan housing to "AUTO" and the top switch to either "HIGH" or "LOW" for fan speed.

This will allow the fan to turn on as the stove has come up to operating temperature. It will also shut the fan system off after the fire has gone out and the unit cooled to below a useful heat output range.

If the fan cycles on and off continuously the thermo switch sensor is not making contact with the stove body. Remove the fan, bend the bracket closer to the stove and re-install the fan.

MANUAL

To manually operate the fan system push the bottom switch to "MAN" and the top switch to either "HIGH" or "LOW". This will bypass the sensing device and allow full control of the fan.

Switching from "AUTO" to "MAN" or "HIGH" to "LOW" may be done anytime.

WARNING: Electrical Grounding Instructions
This appliance is equipped with a three pronged (grounding) plug for your protection against shock hazard and should be plugged directly into a properly grounded three-prong receptacle. Do not cut or remove the grounding prong from this plug.

CAUTION: Label all wires prior to disconnection when servicing controls. Wiring errors can cause improper and dangerous operation.

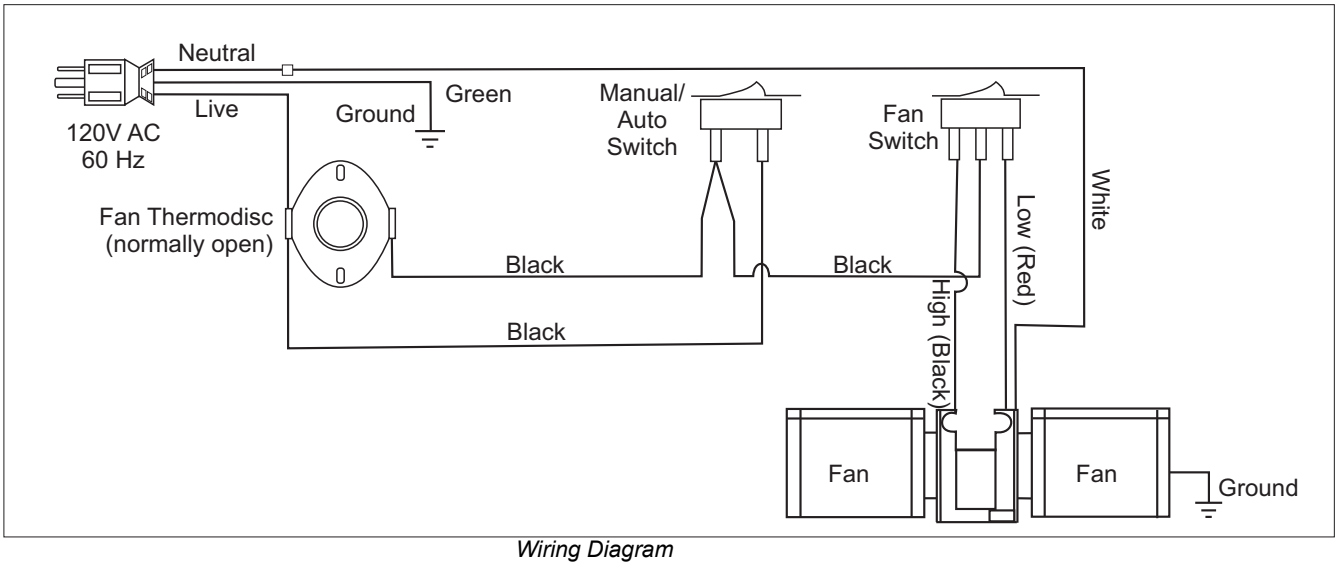

Wiring Diagram

Stainless Steel Smoke Deflector Installation

The stainless smoke deflector is located in the upper front area of the firebox. The deflector is held in place with 2 bolts
Prior to the first fire, ensure deflector is seated properly and secured with 2 hand tightened bolts.

IMPORTANT: There will also be a Vermiculite baffle on top of the stainless steel smoke deflector. Take care when removing the stainless steel smoke deflector as this vermiculite baffle is not visible.

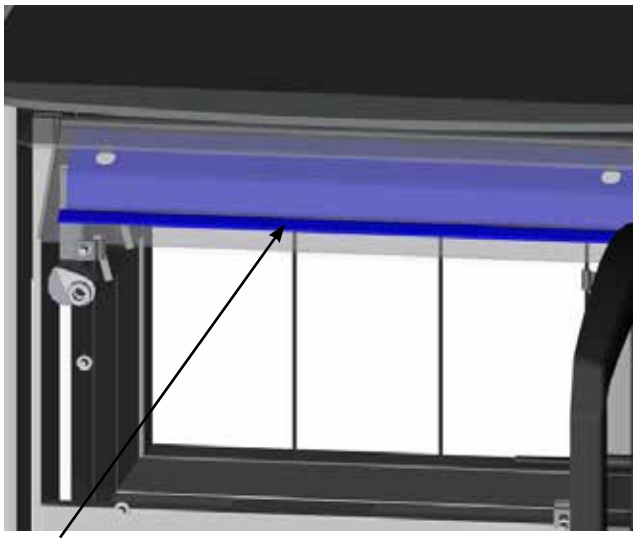

Smoke deflector

Smoke deflector is installed through the door opening in location shown in diagram

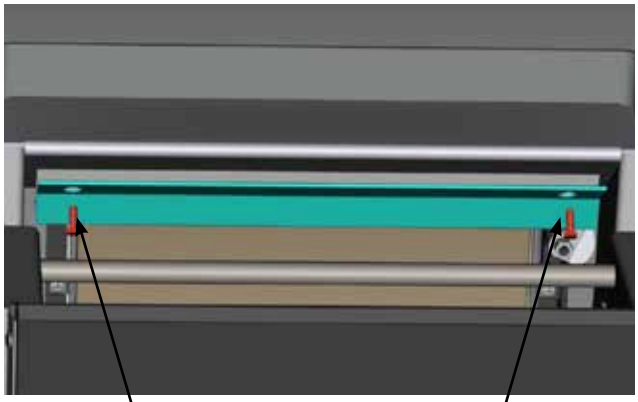

Smoke deflector installed with 2 bolts.

Note: *This is a view from the back of the unit through the top.*

To replace the deflector, loosen off both bolts and slide defector upward and out. Install new deflector and hand tighten bolts. Ensure positive location of the defector prior to hand tightening.

WARNING: Operation of the unit with out proper installation of smoke deflector will void warranty.



Ensure deflector is seated so bolts are situated at the top of the keyhole before tightening.

Seasoned Firewood

Whether you burn wood in a fireplace, stove or insert, good quality firewood is the key to convenience, efficiency and safety. Wet wood and pieces that are not the right size and shape for your wood burner can be frustrating, burn inefficiently and deposit creosote that can fuel a dangerous chimney fire. Good planning, seasoning and storage of the firewood supply are essential to successful wood burning.

- Stack the wood in separate rows in an open location where the summer sun can warm it and breezes can carry away the moisture. Do not stack unseasoned wood tightly in an unvented storage area.
- Do not allow firewood to lie on the ground for more than a couple of days before stacking. Mould and rot can set in quickly.
- Stack the wood up off the ground on poles, lumber rails or pallets.
- The top of the pile can be covered to keep off rain, but do not cover the sides.

Softer woods like pine, spruce and poplar/aspen that is cut, split and stacked properly in the early spring maybe be ready for burning in the fall. Extremely hard woods like oak and maple, and large pieces of firewood, may take a minimum of a full year to dry enough. Drying may also take longer in damp climates.

There are a few ways to tell if wood is dry enough to burn efficiently. Use as many indicators as possible to judge the dryness of the firewood your are considering. Here are ways to judge firewood moisture.

- Using a moisture meter, select the species of fuel and then penetrate the pins into a split piece. Ideal moisture and seasoned firewood should be less than 20% moisture content.
- Checks or cracks in the end grain can be an indication of dryness, but may not be a reliable indicator. Some wet wood has checks and some dry wood has no checks.
- The wood tends to darken from white or cream colour to grey or yellow as it dries.
- Two dry pieces banged together sound hollow; wet pieces sound solid and dull.
- Dry wood weighs much less than wet wood.
- Split a piece of wood. If the exposed surface feels damp, the wood is too wet to burn.

Operating Instructions

With your unit now correctly installed and safety inspected by your local authority, you are now ready to start a fire. Before establishing your first fire, it is important that you fully understand the operation of your draft control.

WARNING

Fireplace Stoves equipped with doors should be operated only with doors fully closed. If doors are left partly open, gas and flame may be drawn out of the fireplace stove opening, creating risks from both fire and smoke.

Draft Control

Both the primary and air wash drafts are controlled by the control slide located on the front left side of the unit, below the ashlip (when facing the unit). To increase your draft - slide to the left to open, and to decrease - slide to the right to close. The F2450-2 unit has a secondary draft system that continually allows combustion air to the induction ports at the top of the firebox.

Draft is the force which moves air from the appliance up through the chimney. The amount of draft in your chimney depends on the length of the chimney, local geography, nearby obstructions and other factors. Too much draft may cause excessive temperatures in the appliance. Inadequate draft may cause back puffing into the room and plugging of the chimney.

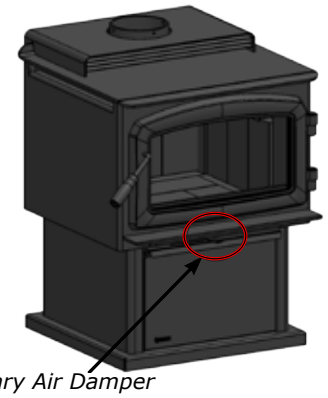

Primary Air Damper

Left - Open **Right - Closed**

WARNING: To build a fire in ignorance or to disregard the information contained in this section can cause serious permanent damage to the unit and void your warranty!!

First Fire

When your installation is completed and inspected you are ready for your first fire.

THIS UNIT IS DESIGNED TO BURN SEASONED CORDWOOD ONLY. COAL, BRIQUETTES AND ALL OTHERS LISTED ON PAGE 2 ARE NOT APPROVED.
SEASONED CORDWOOD SHOULD BETWEEN 19% AND 25% MOISTURE CONTENT.

START UP AND OPERATING PROCEDURES:

1. For the first few days, the wood stove will give off an odour from the paint. This is to be expected as the high temperature paint becomes seasoned. Windows and/or doors should be left open to provide adequate ventilation while this temporary condition exists. Burning the wood stove at a very high temperature the first few times may damage the paint. During the first few fires, keep the combustion rate at a moderate level and avoid a large fire. Only after 5 or 6 such fires can you operate the wood stove at its maximum setting, and only after the metal has been warmed.
2. Do not place anything on the wood stove top during the curing process. This may result in damage to your paint finish.
3. When starting the fire, ensure the air control is in the fully open position (far left). To start a good and clean fire you will need to prepare one load of start-up fuel weighing approximately 15 – 16 lb. in total using only dry seasoned cord wood with less than 20% moisture content. The load consists of 2 – 2.5 lb. kindling ½" to 1" diameter, 4 pieces 16" long 2.5" – 3" diameter and and 5 – 7 pieces 2.5" – 3" diameter 12" long.
4. Load 2 pieces 16" long on the bottom centre of the firebox, spaced 8" – 10" in a North South (front to back) orientation. Add few pieces of crumpled paper and the kindling in between these 2 pieces. On top, load the 12" long pieces east west (side to side) orientation from the back of the firebox to the front, spaced 1" – 2". Load the 2 remaining 16" long pieces on top in a North South (front to back) orientation spaced 8" – 10".
5. Ensure primary air control is fully open to the left facing the unit and then light the paper and the kindling. Adjust the door opening to establish fire and for less smoke roll out. Keep the door in this position for 5 – 6 minutes until the secondary tubes start flashing and then close the door. (Leaving the door slightly open will help your fire start more rapidly.)
6. Burn on high setting (primary air control fully open to the left) for approx. 1h. Once most of the wood has burned down but there are still good flames, level evenly the coals. Now you can reload the stove.

NOTE: These steps are crucial to ensure proper charcoaling and coal bed prior to loading High, Med and Low fire loads.

7. The next step is to create a pre-burn load. This step is necessary to bring the stove temperature to an equilibrium and to create a hot coal bed for the main load of wood. The size and the loading pattern is the same as for the startup load above.
   After loading keep the door slightly open for 3 – 4 minutes, until the fire is well established, then close the door.
   Burn on high air setting (primary air control fully open to the left) for approximately 30 minutes then reduce the primary air setting to your desired burn category. Now turn the fan on low for low and medium low setting and on high for medium high and high air settings.
   For a high burn leave the air fully open and turn the fan on high.
   Once a nice coal bed is established and there are still good-sized flames, the main load of larger logs can be loaded into the firebox. Rake and level the coals to create a uniform charcoal bed.
   Open the primary air fully and turn off the fan. Now the main load of larger logs can be loaded. Load 6 pieces (maximum) of 16.75 - 17" long logs, 3"-4" diameter front to back in a North South orientation. Once loaded, keep the door open for 3 to 4 minutes, until strong flames are established. Turn on high setting (primary air control fully open to the left) for 5 to 10 minutes then adjust the air control to your desired setting. For a high /medium high air setting the fan can be turned on high at 15 minutes. For a low/medium low air setting the fan can be turned on low at 30 minutes.
   High Fire: Air control to far left.
   Low Fire: Air control to far right.
   Med Low Fire: Air control slightly left of low fire setting.
   Med High Fire: Approx. 1" from low air setting.
   For low and medium fire, adjust the air gradually from high to the desired position.

   WARNING: Never build a roaring fire in a cold wood stove. Always warm your wood stove up slowly!

   From the start up of a cold stove, a medium to high firing rate must be maintained for 30 min. This ensures that the stove, and fuel are all stabilized at proper operating temperatures. Even though it is possible to have high temperatures within minutes after a fire has been started, if the fire is allowed to die down immediately it may go out. During re-fueling and rekindling of the cool fire, or a fire that has burned down to the charcoal phase, operate the stove at a medium to high firing rate for about 15 - 30 minutes to ensure to reach operating temperatures.
8. During the first few days it may be more difficult to start the fire. As you dry out your firebrick and your masonry flue, your draft will increase.
9. For those units installed at higher elevations or into sub-standard masonry fireplaces, drafting problems may occur. Consult an experienced dealer or mason on methods of increasing your draft.
10. Some cracking and popping noises may be experienced during the heating up process. These noises will be minimal when your unit reaches temperature.
11. All fuel burning appliances consume oxygen during operation. It is important that you supply a source of fresh air to your unit while burning. A slightly opened window is sufficient for the purpose. If you also have another fireplace in your home, a downdraft may be created by your Regency Stove causing a draft down your chimney. If this occurs, slightly open a window near your unit.

WARNING: If the body of your unit, or any part of the chimney connector starts to glow, you are over firing. Stop loading fuel immediately and close the draft control until the glow has completely subsided.

12. Green or wet wood is not recommended for your unit. If you must add wet or green fuel, open the draft control fully until all moisture has been dispersed by the intense fire. Once all moisture has been removed, the draft control may be adjusted to maintain the fire.
13. If you have been burning your stove on a low draft, use caution when opening the door. Open the door a crack, and allow the fire to adjust before fully opening the door.
14. The controls of your unit or the air supply passages should not be altered to increase firing for any reason.
15. If you burn the unit too slowly or at too low a setting your unit will not be operating as efficiently as it can. An easy rule of thumb says that if your glass is clean, then your flue is clean and your exhaust is clean. Burn the stove hot enough to keep your glass clean and you won't need to clean your flue as often.

    HOT WHILE IN OPERATION. KEEP CHILDREN, CLOTHING AND FURNITURE AWAY. CONTACT MAY CAUSE SKIN BURNS.

    NOTE: Always stir the coal approximately half way through a burn cycle to ensure proper charcoaling.

    CAUTION: Do not build the fire too close to the glass, unless/otherwise specified.

How to Light and Maintain a Wood Stove Fire

Fan Operation

The fan unit must not be turned on until a fire has been burning for at least 20 minutes and the unit is hot enough. As well, after each fuel loading the fan must be shut off until 20 minutes has elapsed. To operate fan automatically, push switch on side of fan housing to "Auto" and second switch to either "High" or "Low" for fan speed. The automatic temperature sensor will engage the blower when the unit is at temperature and will shut off the blower once the fire has gone out and the unit has cooled to below a useful heat output range.
To manually operate the fan system, push the first switch to "Man" and second switch to either "high" or "Low". This will bypass the sensing device and allow full control of the fan. Switching from "Auto" to "Manual" or "High" to "Low" may be done at any time.
For low and medium low burn operate the fan on low speed and for medium high and high burn operate the fan on high speed.

Ash Disposal

During constant use, ashes should be removed every few days. The Ash Drawer option features a convenient ash dump for easy removal of ash, refer to Modular Installation Options section.

Safety Precautions

1. Do not allow ashes to build up to the loading doors! Only remove ashes when the fire has died down. Even then, expect to find a few hot embers.

2. Please take care to prevent the build-up of ash around the start-up air housing located inside the stove box, under the loading door lip.

3. Never start a fire if the ash plug and ash drawer are not in place. This will cause over firing which can cause excessive warping of the stove. Evidence of over firing can void the warranty on your stove.

4. The firebricks are brittle and can be damaged if the plug is replaced carelessly or pieces that are too large are forced through the hole.

Ash Drawer Operating Guidelines

1. Only clean ashes out of the stove when the unit has cooled down. Remove the plug by lifting on the handle using the tool provided. The plug may still be warm, use caution. Push the ashes down the hole into the ash drawer, the large pieces can be left in the firebox and burned during the next fire or removed through the door opening.

2. Always leave 1/2 to 1 inch of ash in the bottom of the firebox. This helps in easier starting and a more uniform burn of your fire. Replace ash plug when ashes have been removed.

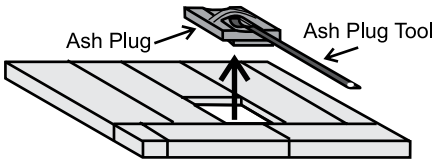

3. **Pedestal Units:**
   To remove the drawer, lift slightly and slide it out. When the drawer is completely out, slide the cover plate over the ash drawer and carry away.

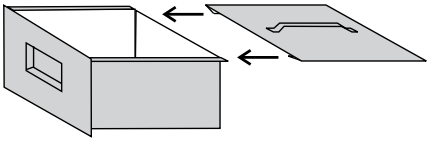

CAUTION: HOT WHILE IN OPERATION. KEEP CHILDREN, CLOTHING AND FURNITURE AWAY. CONTACT MAY CAUSE SKIN BURNS.

4. When emptying the ash drawer, make sure the ashes are cold. Ashes should be placed in a metal container with a tight fitting lid. The closed container of ashes should be placed on a non-combustible floor or on the ground, well away from all combustible materials, pending final disposal. If the ashes are disposed of by burial in soil or otherwise locally dispersed, they should be retained in the closed container until all cinders have thoroughly cooled. Other waste should not be placed in the ash container.

5. Before putting the ash drawer back into place, make sure the ash plug is back in place.

   Pedestal Units: make sure the cover lid is off.

Safety Guidelines and Warnings

CAUTION: Do not use chemicals or fluids to start fire.

1. **CAUTION:** Never use gasoline, gasoline type lantern fuels, kerosene, charcoal lighter fuel, or similar liquids to start or 'freshen up' a fire in your heater. Keep all such liquids well away from the heater while it is in use.

2. Keep the door closed during operation and maintain all seals in good condition.

3. Do not burn any quantities of paper, garbage, and never burn flammable fluids such as gasoline, naptha or engine oil in your stove.

4. Do not store solid fuels by the appliance.

5. If you have smoke detectors, prevent smoke spillage as this may set off a false alarm.

6. Do not overfire heater. If the chimney connector, flue baffle or the stove top begin to glow, you are over firing. Stop adding fuel and close the draft control. Over firing can cause extensive damage to your stove including warping and premature steel corrosion. Over firing will void your warranty.

7. Do not permit creosote or soot build-up in the chimney system. Check and clean chimney at regular intervals. Failure to do so can result in a serious chimney fire.

8. Your Regency stove can be very hot. You may be seriously burned if you touch the stove while it is operating, keep children, clothing and furniture away. Warn children of the burn hazard.

9. The stove consumes air while operating, provide adequate ventilation with an air duct or open a window while the stove is in use.

10. Do not connect this unit to a chimney flue serving another appliance.

11. Do not use grates or andirons or other methods for supporting fuel. Burn directly on the bricks.

12. Open the draft control fully for 10 to 15 seconds prior to slowly opening the door when refuelling the fire.

13. Do not connect your unit to any air distribution duct.

14. This heater is designed to burn natural wood only. Higher efficiencies and lower emissions generally result when burning air dried seasoned hardwoods, as compared to softwoods or to green or freshly cut hardwoods.

15. Do not store any fuel closer than 2 feet from your unit. Do not place wood, paper, furniture, drapes or other combustibles near the appliance.

16. **WARNING: Do not operate without either the Ash Plug properly seated or the Ash Dump Plates screwed in place, excessive temperatures will result.**

17. **CAUTION: Do not operate with broken glazing.**

18. **WARNING: Do not use abrasive cleaners to clean the glass window.**

19. **WARNING: Avoid impact on glass doors such as striking or slamming shut.**

DO NOT BURN:

- Treated wood
- Coal
- Garbage
- Cardboard
- Solvents
- Colored Paper
- Trash
- Salt drift wood
- Cut lumber, plywood, mill ends
- Kiln dried wood
- Bio bricks

CAUTION: DO NOT BURN GARBAGE OR FLAMMABLE LIQUIDS SUCH AS GASOLINE, NAPHTHA OR ENGINE OIL. SOME FUELS COULD GENERATE CARBON MONOXIDE AND ARE VERY DANGEROUS.

CAUTION: DO NOT CONNECT TO, OR USE IN CONJUNCTION WITH ANY AIR DISTRIBUTION DUCT WORK UNLESS SPECIFICALLY APPROVED FOR SUCH INSTALLATION.

Classic Door Handle Replacement

1. To remove the wooden door handle from unit—locate the 7/64" Allen key hole at the bottom of wooden handle.



2. Turn the 7/64" Allen key counter-clockwise to loosen the screw. When screw is completely loosened, drop handle down off door shaft and replace with new handle.



Glass Replacement

Your Regency stove is supplied with 5 mm Neoceram ceramic glass that will withstand the highest heat that your unit will produce. In the event that you break your glass by impact, purchase your replacement from an authorized Regency dealer only.

Remove the door from the stove and remove the screws securing the glass retainer. Position the glass in the door, make sure that the glass gasketing will properly seal your unit, and replace the retainer, it should rest on the gasket not the glass. Tighten securely, but do not wrench down on the glass as this may cause the glass to break.

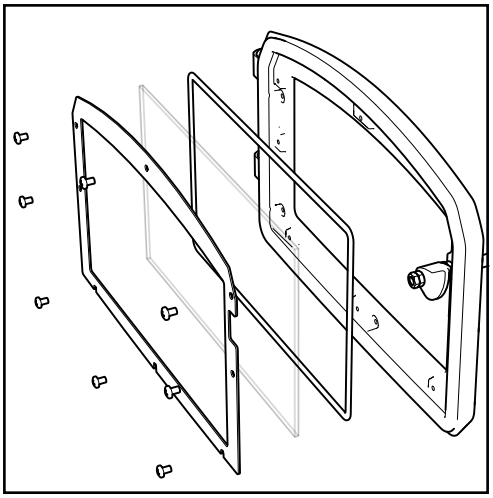

Maintenance

It is very important to carefully maintain your fireplace stove, including burning seasoned wood and maintaining a clean stove and chimney system. Have the chimney cleaned before the burning season and as necessary during the season, as creosote deposits may build up rapidly. Moving parts of your stove require no lubrication.

Creosote

When wood is burned slowly, it produces tar and other organic vapours combine with moisture to form creosote. The creosote vapours condense in the relatively cool chimney flue of a slow burning fire. As a result, creosote residue accumulates on the flue lining. When ignited, this creosote can result in an extremely hot fire.

The chimney connector and chimney should be inspected at least once every two months during the heating season to determine if creosote build up has occurred. If creosote has accumulated it should be removed to reduce the risk of chimney fire.

CAUTION: Things to remember in case of a chimney fire:

1. Close all draft and damper controls.

2. CALL THE FIRE DEPARTMENT.

Ways to Prevent and Keep Unit Free of Creosote

1. Burn stove with the draft control wide open for about 10-15 minutes every morning during burning season.

2. Burn stove with draft control wide open for about 10 - 15 minutes every time you apply fresh wood. This allows the wood to achieve the charcoal stage faster and burns up any unburned gas vapours which might otherwise be deposited within the system.

3. Only burn seasoned wood! Avoid burning wet or green wood. Seasoned wood has been dried at least one year.

4. A small hot fire is preferable to a large smouldering one that can deposit creosote within the system.

5. Establish a routine for the fuel, wood burner and firing technique. Check daily for creosote buildup.

6. The chimney and chimney connector should be inspected at least once every two months during the heating season to determine is a creosote buildup has occurred.

7. **Have chimney system and unit cleaned by competent chimney sweeps twice a year during the first year of use and at least once a year thereafter or when a significant layer of creosote has accumulated (3 mm/1/8" or more) it should be removed to reduce the risk of a chimney fire.**

Door Gasket

If the door gasket requires replacement 7/8" diameter material must be used. Regency uses a 7/8" gasket rope (Part #846-570). A proper high temperature gasket adhesive is required. See your Regency Dealer.

The door catch may require adjustment as the door gasket compresses after a few fires. The door latch compression may require adjustment to renew seal. Removal of a shim, (see section in this manual), will allow the latch to be moved closer to the door frame, causing a tighter seal.

Glass Maintenance

Your Regency stove is supplied with 5mm Neoceram ceramic glass (Part #846-306) that will withstand the highest heat that your unit will produce. In the event that you break your glass by impact, purchase your replacement from an authorized Regency dealer only, and follow our step-by-step instructions for replacement (refer to Glass Replacement section).

Allow the stove to cool down before cleaning the glass. Cleaning the glass will prevent build up of carbon and allow full view of the fire.

WARNING: Do not clean the glass when it is hot.
WARNING: Do not use abrasive cleaners, a damp cloth and glass cleaner is effective.
WARNING: Do not use substitute materials.
WARNING: Do not abuse the glass door, such as striking of slamming shut.
WARNING: Do not operate with broken glass.

Wood Storage

Store wood under cover, such as in a shed, or covered with a tarp, plastic, tar paper, sheets of scrap plywood, etc., as uncovered wood can absorb water from rain or snow, delaying the seasoning process.



Secondary Air Tube Removal/Installation

1. Allow the stove to burn out and cool down, until cool to touch.

2. Open stove door to access secondary air tubes.

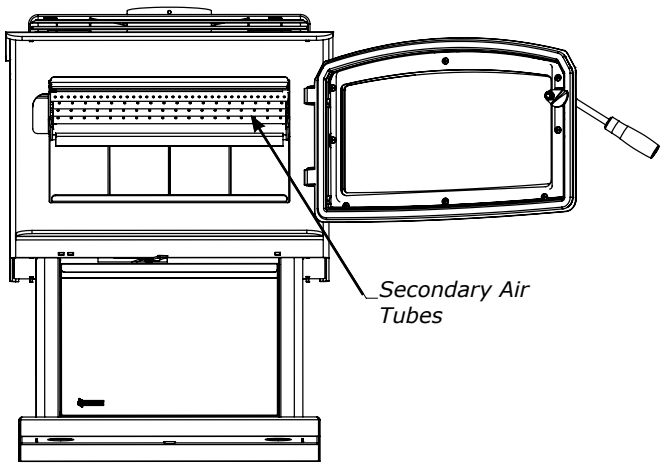

3. Grasp front secondary air tube firmly with vise grips, using a hammer tap vise grips from right to left until air tube is released from grip. Remove. See diagram 1. Repeat step to remove second airtube from front.

4. Remove the fragile two piece Baffles, then remove the remaining 2 tubes.

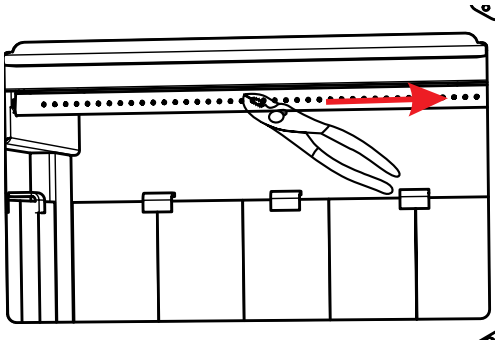

Diagram 1

5. To reinstall or replace, first slide left side of tube into hole on left side air channel. Align tab on right side air channel with notch on right hand end of air tube. Firmly grip center of air tube with vise grips, use hammer to tap vise grips from left to right until the tube bottoms out into the air channel on right.

Note : If air tube is locked into place correctly there should be slight movement when moving the air tube back and forth.

Annual Maintenance	
Completely clean out entire unit	Annually
Inspect air tube, and bricks	Replace any damaged parts.
Adjust door catch assembly	If unable to obtain a tight seal on the door - replace door gasket seal. Readjust door catch after new gasket installed.
Inspect condition and seal of: Glass Gasket Door Gasket	 Perform paper test - replace gasket if required
Paper Test	Test the seal on the loading door with a paper bill. Place a paper bill in the gasket area of the door on a cold stove. Close the door. Try to remove the paper by pulling. The paper should not pull out easily, if it does, try adjusting the door latch, if that doesn't solve the problem replace the door gasket.
Check and lubricate door hinge + latch	Use only high temperature anti seize lube. (ie. never seize)
Check glass for cracks	Replace if required.
Clean blower motor	Disconnect power supply. Remove and clean blower. ***DO NOT LUBRICATE***
Inspect and clean chimney	Annual professional chimney cleaning recommended.
NOTE: Chimney Cleaning We highly recommend that the chimney cleaning be done by a professional as they will have the necessary tools such as a proper sized brush and special vacuum cleaner designed to deal with fine particles.	

IMPORTANT
Before attempting to loosen or remove any screw/bolt from the interior of a wood stove, insert or factory built fireplace, we highly recommend to liberally spray the screw/bolt with a good-quality penetrating oil, one that does not have flammable properties contained within the penetrating oil being used. Allow it to set, then tap or vibrate the screw/bolt to help loosen it before attempting to remove it. For best results, follow the instructions that are provided with the penetrating oil.

Main Assembly

	Part #	Description
1	022-062	SS Smoke Deflector
2	021-020	Draft Control Lever
3	022-557	Rear Air Deflector
4	022-955	Baffle Bricks Complete (Set Of 2) (Includes Insulation)
5	033-953	3/4 OD Air Tube
5a	033-954	3/4" OD Air tube (Qty 3) (Each)
6	846-570	7/8" Door Gasket Repair Kit
7	846-308	Replacement Glass - Large (Includes Glass Gasket)
8	846-692	1/8" x 3/4" Wide Graphite Glass Gasket Tape (6') (936-241)
9	181-034F	Glass Retainer
10	021-973	Door Handle Assembly Complete
11	948-079BN	Hinge Cap Brush Nickel (Each)
11	846-918	Hinge Caps - Black (Set of 2)
12	948-146	Long Black Handle
13	850-251	Black Door - Complete
13	850-253	Black with Nickel Accent Door - Complete
14	846-515	Fan Assembly Complete
15	910-138	2 Way Switch
16	910-140	3 way Switch
17	022-942	Airmate
18	022-113	Top Baffle Insulation
N/S	075-073F	Tool Hanger
N/S	948-223	Regency Logo Plate
N/S	910-157/P	Fan Motor Only With Squirrel Cage
N/S	910-142	Fan Thermodisc
N/S	021-022	Firebox Floor Gasket
N/S	022-111	Top Firebox Back Gasket
N/S	022-112	Top Firebox Side Gasket (Each/2 per unit)
N/S	021-051/P	Right Brick Bracket Packaged
N/S	021-054/P	Left Brick Bracket Packaged
N/S	902-816	Vertical Baffle Top Front (Not Visible. Hidden above Part #022-062)

N/S = Not Shown

parts list

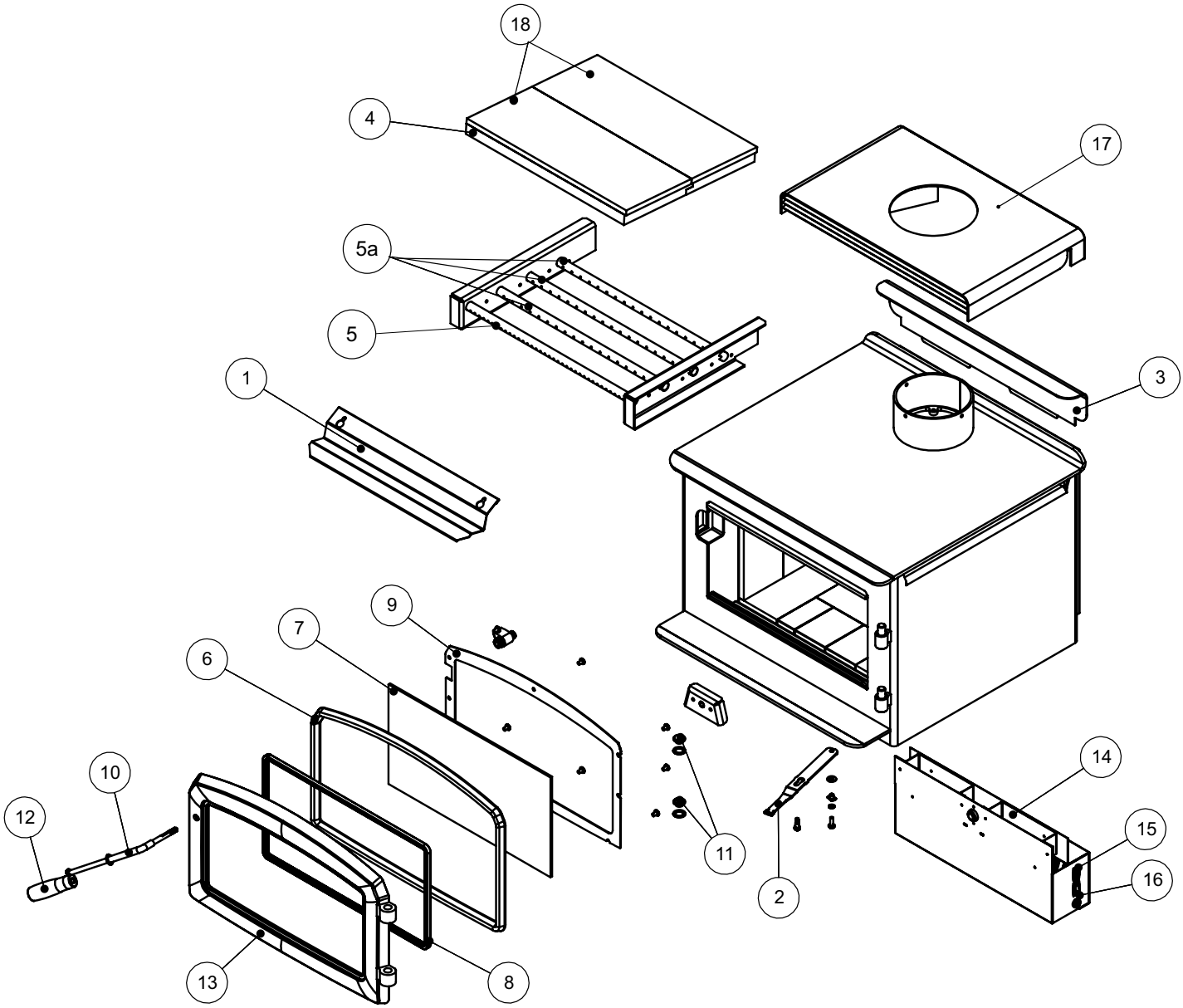

Bases

	Part #	Description
40	022-911	Bottom heat Shield
41	850-126	Black Cast legs (Set Of 4)
41	850-128	Nickel Cast legs (Set Of 4)
42	022-914	Ashdrawer Bottom Heat Shield
43	942-110	Ashplug
44	820-249	Ashplug Tool
45	022-023	Blanking Plate
N/S	905-099	5/16" x 6 1/2 " Long Hex Head Bolt (Each)
N/S	022-025F	Metal Washer
N/S	022-024	Metal Spacer/Support Bracket (Each)

	Part #	Description
50	022-915	Pedestal Complete
51	022-011	Pedestal Door
52	904-257	Magnetic Catch (Each)
53	075-910	Ashdrawer Pedestal
54	022-946	Wood Stacker Complete
N/S	948-055	Levelling Legs
N/S	022-214	Backing Plate

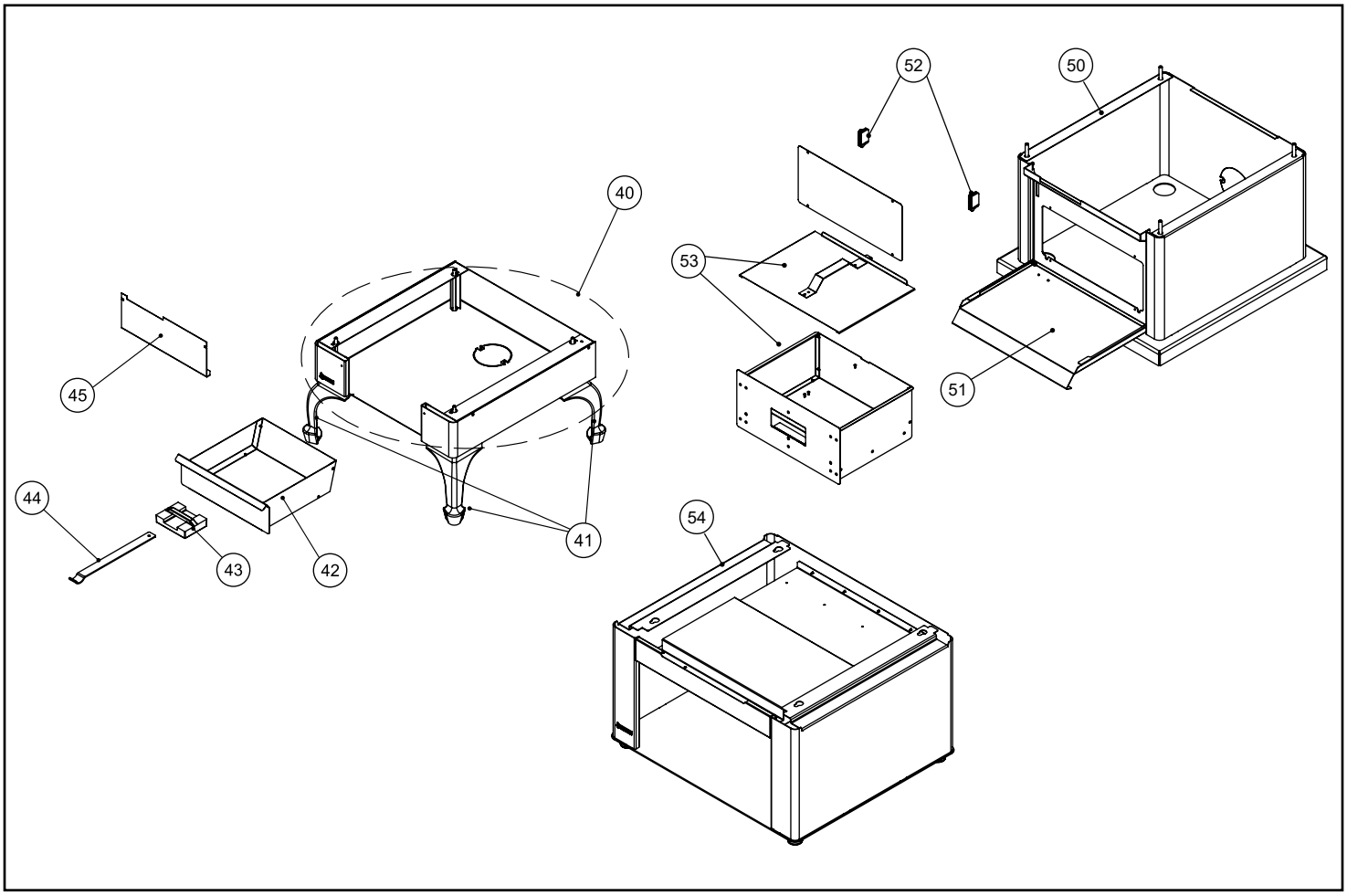

parts list

020-960 Brick Kit Complete	
70)	Brick - Regular Full Size: 1-1/4" x 4-1/2" x 9"
72)	Brick Partial: 1-1/4" x 2" x 4-1/2"
74)	Brick Partial: 1-1/4" x 4-1/2" x 3-1/2"
76)	Brick Partial: 1-1/4" x 2" x 9"
NOTE: This kit contains one spare brick in case of breakage.	

Note: The gasket behind the bottom bricks must be purchased separately & is not included with the Brick Kit.

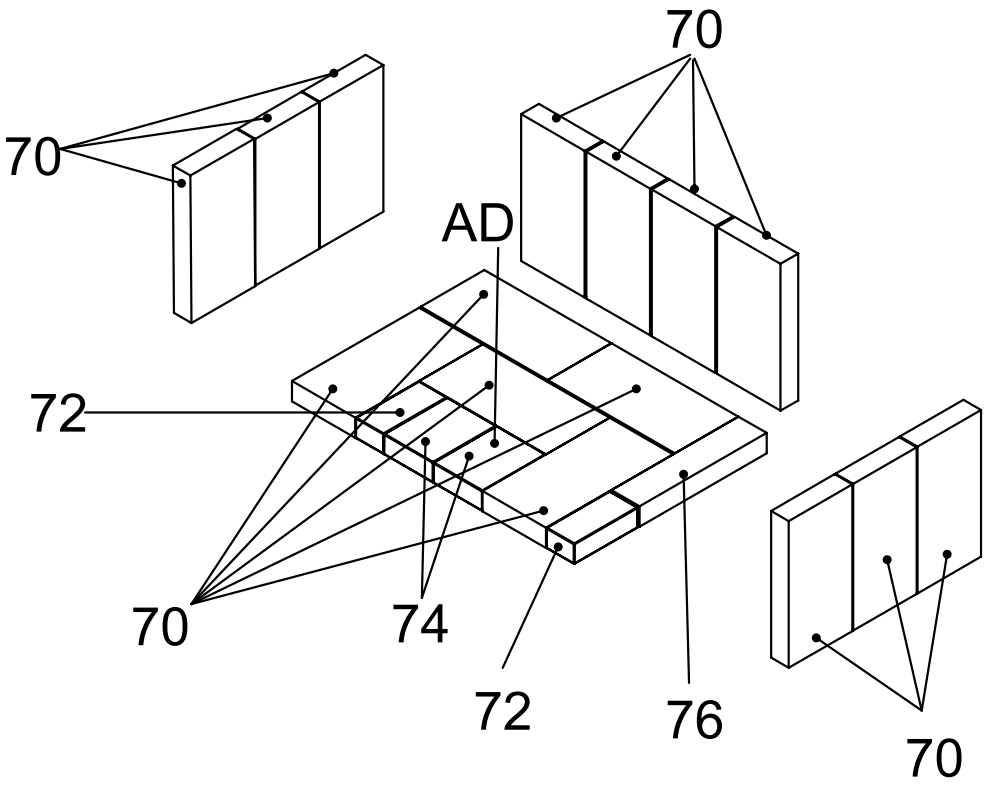

Indoor Wood Product Warranty

Limited Lifetime Warranty

FPI Fireplace Products International Ltd. (for Canadian customers) and Fireplace Products U.S. Inc. (for US customers) (collectively referred to herein as "FPI") extends this Limited Lifetime Warranty to the original purchaser of this Appliance provided the product remains in the original place of installation. The items covered by this Limited Lifetime Warranty and the period of such coverage are set forth in the table below.

An Appliance in this policy is defined as an Indoor wood insert or Indoor wood freestanding stove.
This Appliance has only been certified and listed for use indoors.

Note: This Wood Product Warranty does not apply to the EC50 & CF700 models. See EC50/CF700 policy for specific warranty details.

This Limited Lifetime Warranty starts on the day the Appliance was purchased.
The Limited Lifetime Warranty is not transferable, assignable or negotiable under any circumstances.

Indoor Wood Products	Component Coverage					Subsidized Labor Coverage***
Components Covered	Limited Lifetime	5 years	2 years	1 year	Warranty	(Years)
Welded Firebox Steel	✓					5
All Stainless Steel Components, Smoke Deflectors, Heat Shields etc.	✓					3
Air Tubes	✓					3
Airwash	✓					3
Door handle and latch assembly, all hardware	✓					3
Glass Thermal Breakage Only	✓					3
Steel Faceplates, Accessory Housings	✓					3
All Plating	✓					3
Ash Drawer, Heatshields, Pedestal	✓					0
All Baffles, Steel, Ceramic, Vermiculite C-Baffles	✓					0
All castings, firebox, surrounds, doors, panels etc.		✓				3
All Electrical, Blower, wiring, switches, Catalytic Monitors, Probes, etc.			✓			2
Glass - Cracing				✓		1
Catalyst Combustor					**10 Years Prorated	0
Venting/Chimney				✓		1
Screens				✓		1

**See specific warranty details regarding the catalyst combustor in this manual.

Note: Warranty coverage noted above may not be applicable as components/options vary based on appliance purchased.

Conditions:

Warranty protects against defect in manufacture or FPI factory-assembled components only, unless herein specified otherwise.

****This warranty does not cover dealer travel costs, mileage, fuel, tolls for diagnostic or service work. All labor rates paid to authorized dealers are subsidized, pre-determined rates. Dealers may charge you for travel and additional time beyond their subsidy.**

Any part(s) found to be defective during the warranty period as outlined above will be repaired or replaced at FPI's option through an accredited distributor, dealer or pre-approved and assigned agent provided that the defective part is returned to the distributor, dealer or agent for inspection if requested by FPI. Alternatively, FPI may, at its own discretion, fully discharge all of its obligations under warranty by refunding the verified purchase price of the product to the original purchaser. The purchase price must be confirmed by the original Bill of Sale.

The authorized selling dealer, or an alternative authorized FPI dealer if pre-approved by FPI, is responsible for all in-field diagnosis and service work related to all warranty claims. FPI is not responsible for results or costs of workmanship of unauthorized FPI dealers or agents in the negligence of their service work.

At all times, FPI reserves the right to inspect reported in the field/on location complaints of products claimed to be defective before processing or authorizing any claim. Failure to allow this upon request will void the warranty.

All warranty claims must be submitted by the dealer servicing the claim, including a copy of the Bill of Sale (proof of purchase by you). All claims must be complete and provide full details as requested by FPI to receive consideration for evaluation. Incomplete claims may be rejected.

Replacement Appliances to the original purchaser are limited to one per warranty term. Air tube and baffle replacements are limited to one replacement per warranty term.

The Appliance must be installed according to all manufacturers' instructions as per the manual. All Local and National required codes must be met.

The Installer is responsible for ensuring the Appliance is operating as designed at the time of installation.

The original purchaser is responsible for the annual maintenance of the Appliance, as outlined in the owner's manual. As outlined below, the warranty may be voided due to problems caused by a lack of maintenance.

Purchased parts: Repair/replacement parts purchased by the consumer from FPI after the original coverage has expired on the Appliance will carry a 90-day warranty from the purchase date, valid with a receipt only. Any item shown to be defective will be repaired or replaced at our discretion. No labor coverage is included with these parts.

If freight damage has been found either externally or internally, the dealer must be informed within 3 days. All claims as a result of damage must be submitted by the dealer servicing the claim, including a copy of the Bill of Sale (proof of purchase). All claims must be complete and provide full details as requested by FPI to receive consideration for evaluation. Incomplete claims may be rejected.

As this is a Limited Lifetime Warranty, if the Appliance needs to be replaced, the Appliance that was purchased at the time of sale might not be replaced with exactly the same model Appliance. In that case, FPI will replace your Appliance with one that is similar at the time of replacement under the terms of this Limited Lifetime Warranty, but ONLY in the event that an item covered by the Limited Lifetime Warranty is found to be defective. Please refer to the table on first page of this warranty for items covered by the Limited Lifetime Warranty. Product changes might be the result of the original Appliance being discontinued, changes in regulatory requirements, product advancements, etc., which are beyond the control of FPI. This Limited Lifetime Warranty does not cover any installation costs, or costs associated with changes of required clearances for the replacement Appliance, hearth pads, mantles, facing and/or facing materials such as framing, completed walls made of drywall, wood, non-combustible board, tile, brick, stone, marble etc., venting/chimney systems, or components of the chimney system.

If a suitable replacement is not available, FPI will refund 80% of the purchase price of the Appliance and any applicable FPI accessories (faceplates, brick panels, media, etc.) purchased at the time of sale. In no event will FPI refund any portion of the purchase price of, or reimburse costs associated with, any other items, including without limitation, installation of a new unit, changes of required clearances for a new unit, hearth pads, mantles, facing and/or facing materials such as framing, completed walls made of drywall, wood, non-combustible board, tile, brick, stone, marble etc., venting/chimney systems, or components of the chimney system. A copy of the receipt or bill of sale will be necessary to validate the purchase price.

Exclusions:

This Limited Lifetime Warranty does not extend to paint, rust or corrosion of any kind due to a lack of maintenance or improper venting, combustion air provision, corrosive chemicals (i.e. chlorine, salt, air, etc.), firebrick (rear, sides or bottom), door or glass gasketing, vermiculite floor bricks, andiron assemblies/flue damper rod or any other additional factory fitted gasketing, batteries.

Malfunction, damage or performance-based issues as a result of environmental conditions, location, chemical damages, downdrafts, installation error, an installation by an unqualified installer, incorrect chimney components (including but not limited to cap size or type), operator error, abuse, misuse, use of improper fuels (such as unseasoned cordwood, mill-ends, construction lumber or debris, off-cuts, treated or painted lumber, metal or foil, plastics, garbage, solvents, cardboard, coal or coal products, oil-based products, waxed cartons, compressed pre-manufactured logs, kiln dried wood), lack of regular maintenance and upkeep, acts of God, weather-related problems from hurricanes, tornados, earthquakes, floods, lightning strikes/bolts or acts of terrorism or war, which result in a malfunction of the Appliance are not covered under the terms of this Limited Lifetime Warranty.

FPI has no obligation to enhance or modify any Appliance once manufactured (i.e. as products evolve, field modifications or upgrades will not be performed on existing Appliances).

Any Appliance showing signs of neglect or misuse will not be covered under the terms of this warranty policy and may void this warranty, including Appliances with rusted or corroded fireboxes that have not been reported as rusted or corroded within three (3) months of installation/purchase.

Appliances which show evidence of being operated while damaged, or with problems known to the purchaser and causing further damages will void this warranty.

Appliances where the serial no. has been altered, deleted, removed or made illegible will void this warranty.

Minor movement, expansion and contraction of the steel is normal and is not covered under the terms of this warranty.

Freight damages for products or parts are not covered under the terms of the warranty.

Products made or provided by other manufacturers and used in conjunction with the FPI Appliance without prior authorization from FPI may void this warranty.

Limitations of Liability:
The original purchaser's exclusive remedy under this warranty, and FPI's sole obligation under this Limited Lifetime Warranty, express or implied, in contract or in tort, shall be limited to replacement, repair, or refund, as outlined above. IN NO EVENT WILL FPI BE LIABLE UNDER THIS WARRANTY FOR ANY INCIDENTAL OR CONSEQUENTIAL COMMERCIAL DAMAGES OR DAMAGES TO PROPERTY. TO THE EXTENT PERMITTED BY APPLICABLE LAW, FPI MAKES NO EXPRESS WARRANTIES OTHER THAN THE WARRANTY SPECIFIED HEREIN. THE DURATION OF ANY IMPLIED WARRANTY IS LIMITED TO DURATION OF THE EXPRESSED WARRANTY SPECIFIED ABOVE. IF IMPLIED WARRANTIES CANNOT BE DISCLAIMED, THEN SUCH WARRANTIES ARE LIMITED IN DURATION TO THE DURATION OF THIS WARRANTY.

Some US states do not allow limitations on how long an implied warranty lasts, or allow exclusion or limitation of incidental or consequential damages, so the above limitations or exclusions may not apply to you.

Customers located outside the US should consult their local, provincial or national legal codes for additional terms, which may be applicable to this warranty.

How to Obtain Warranty Service:
Customers should contact the authorized selling dealer to obtain warranty service. In the event the authorized selling dealer is unable to provide warranty service, please contact FPI by mail at the address listed below. Please include a brief description of the problem and your address, email and telephone contact information. A representative will contact you to make arrangements for an inspection and/or warranty service.

Canadian Warrantor:

FPI Fireplace Products International Ltd.
6988 Venture St.
Delta, British
Columbia Canada,
V4G 1H4

US Warrantor:

Fireplace Products U.S., Inc.
PO Box 2189 PMB 125
Blaine, WA
United States, 98231

Or contact the Regency Customer Care Centre at 1-800-442-7432 (phone) /604-946-4949 (fax) /customerservice@regency-fire.com (e-mail)

Product Registration and Customer Support:
Thank you for choosing a Regency Fireplace. Regency strives to be a world leader in the design, manufacture, and marketing of hearth products. To provide the best support for your product, we request that you complete a product registration form at http://www.regency-fire.com/Customer-Care/Warranty-Registration.aspx within ninety (90) days of purchase.

Warranty Registration Card

REGENCY
FIREPLACE PRODUCTS

Product Registration and Customer Support:

Thank you for choosing a Regency Fireplace. Regency strives to be a world leader in the design, manufacture, and marketing of hearth products. To provide the best support for your product, we request that you complete a product registration form found on our Web Site under Customer Care within ninety (90) days of purchase.

For purchases made in CANADA or the UNITED STATES:

http://www.regency-fire.com/Customer-Care/Warranty-Registration.aspx

For purchases made in AUSTRALIA:

http://www.regency-fire.com.au/Customer-Care/Warranty-Registration.aspx

You may also complete the warranty registration form below to register your Regency Fireplace Product and mail and/or fax it back to us, and we will register the warranty for you. It is important you provide us with all the information below in order for us to serve you better.

Warranty Registration Form (or Register online immediately at the above Web Site):

Warranty Details	
Serial Number (required):	
Purchase Date (required) (mm/dd/yyyy):	
Product Details	
Product Model (required):	
Dealer Details	
Dealer Name (required):	
Dealer Address:	
Dealer Phone #:	
Installer:	
Date Installed (mm/dd/yyyy):	
Your Contact Details (required)	
Name:	
Address:	
Phone:	
Email:	

For purchases made in CANADA:

FPI Fireplace Products International Ltd.
4288 Venture St.
Delta, British Columbia
Canada, V4G 1H4

Phone: 604-946-5155
Fax: 1-866-393-2806

For purchases made in the UNITED STATES:

Fireplace Products US, Inc.

PO Box 2189 PMB 125
Blaine, WA
United States, 98231

Phone: 604-946-5155
Fax: 1-866-393-2806

For purchases made in AUSTRALIA:

Fireplace Products Australia Pty Ltd
98 Colemans Road
Dandenong South, Vic.
Australia, 3175

Phone: +61 3 9799 7277
Fax: +61 3 9799 7822

For fireplace care and tips and answers to most common questions please visit our Customer Care section on our Web Site. Please feel free to contact your selling dealer if you have any questions about your Regency product.

recycling

PRODUCT LIFE CYCLE:
By recycling your used appliances, you divert waste from your local landfills and help the environment. You also reduce the need for raw materials to manufacture new products. Contact your local municipality for appliance recycling services, local recycling programs, or appliance removal services to ensure your Regency appliance components, and packaging are properly recycled.

Installer: Please complete the following information

Dealer Name & Address: _____

_____

Installer: _____

Phone #: _____

Date Installed:_____

Serial #:_____

Regency is a trademark of FPI Fireplace Products International Ltd.
© Copyright 2026, FPI Fireplace Products International Ltd. All rights reserved.

Printed in Canada